idronics™

JOURNAL OF DESIGN INNOVATION FOR HYDRONIC AND PLUMBING PROFESSIONALS

CALEFFI Hydronic Solutions

31

July 2022

Fundamentals of Pressure Reducing Valves

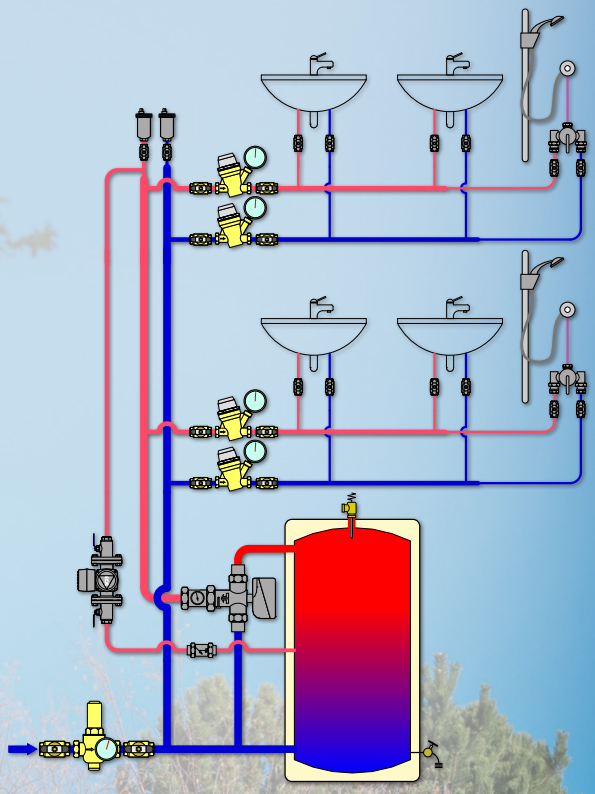





CALEFFI
Hydronic Solutions

www.caleffi.com

WORLD'S MOST RECOGNIZED PRESSURE REDUCING VALVES



The PresCal™ is constructed of dezincification-resistant low lead brass and low friction moving parts that **stand up to hard water and scale** for maximum durability. The fully-contained replaceable cartridge has an integral stainless steel mesh filter which makes cleaning or rebuilding the PresCal fast and easy. **Approvals include compliance with** NSF/ANSI/CAN 61 (rated for commercial hot water 180°F), NSF/ANSI 372 low lead laws, ASSE 1003, CSA B356, and codes IPC, IRC, UPC and NPC for use in accordance with the U.S. and Canadian plumbing codes. **CALEFFI GUARANTEED.**

FROM THE GENERAL MANAGER & CEO

Dear Plumbing and Hydronic Professional,

Caleffi North America participates in many online plumbing help and chat websites. The topics discussed include leaking faucets, insufficient hot water, sewage backups, and everything in between. However, one of the most commonly occurring discussions involves control of water pressure within buildings, and the use of pressure reducing valves (PRVs). The frequency of questions around this topic underscores the need for plumbing professionals to understand how PRVs operate and how to properly apply them.



We estimate that over 90% of performance problems involving PRVs fall into one of three categories: insufficient flow, objectionable noise, and intermittent excessive pressure. A fundamental understanding of how pressure reducing valves function and how to properly integrate them into various plumbing systems can eliminate these problems.

This issue of *idronics* covers the fundamentals of sizing, application, and maintenance of pressure reducing valves. It discusses basic as well as unique details that lead to optimal performance and long service life.

We hope you enjoy this issue of *idronics* and encourage you to send us any feedback by e-mailing us at idronics@caleffi.com.

For prior issues please visit us at www.caleffi.us or visit idronics.caleffi.com for interactive access to the journal.

Mark Olson

Mark Olson

General Manager & CEO

CALEFFI Hydronic Solutions

idronics

31

July 2022

TABLE OF CONTENTS

SECTION PAGE

1 5 INTRODUCTION
- A brief history of water delivery systems

2 8 PLUMBING SYSTEM PRESSURE CONCEPTS
- Low-pressure supply scenarios
- High-pressure supply scenarios
- Static versus dynamic water pressure
- Calculating dynamic pressure drop
- Stabilizing pressure in water distribution system
- Pressure reducing valves operating concepts
- Piston-type pressure reducing valves
- Pilot-operated pressure reducing valves
- Performance of pressure reducing valves
- Pressure reducing valve sizing
- Pressure reduction ratio
- Managing high pressure reduction ratios
- Minimum flow rates for pressure reducing valves
- Managing a wide range of flow rates
- Point-of-entry pressure reduction

3 20 APPLYING PRESSURE REDUCING VALVES
- Point-of-entry pressure reduction
- Independent hot & cold water pressure reduction
- Outdoor Mounting
- Maintaining prv performance
- Other troubleshooting scenarios

25 SUMMARY

26 APPENDIX A: CALEFFI HYDRONIC COMPONENTS

27 APPENDIX B: CALEFFI PLUMBING COMPONENTS

27 APPENDIX C: GENERIC COMPONENTS

28 APPENDIX D: PRESSURE DROP FOR COPPER TUBING

A Technical Journal

from

CALEFFI NORTH AMERICA, INC

3883 W. Milwaukee Rd

Milwaukee, Wisconsin 53208
USA

Tel: 414-238-2360

FAX: 414-238-2366

E-mail: idronics@caleffi.com

Website: www.caleffi.us

To receive future idronics issues

FREE, register online

www.caleffi.us

© Copyright 2022

Caleffi North America, Inc.

Printed: Milwaukee, Wisconsin
USA

Mixed Sources
Product group from well-managed forests, controlled sources and recycled wood or fiber
www.fsc.org Cert no. XXX-XXX-XXXX
© 1996 Forest Stewardship Council
FSC

Disclaimer: Caleffi makes no warranty that the information presented in idronics meets the mechanical, electrical or other code requirements applicable within a given jurisdiction. The diagrams presented in idronics are conceptual, and do not represent complete schematics for any specific installation. Local codes may require differences in design, or safety devices relative to those shown in idronics. It is the responsibility of those adapting any information presented in idronics to verify that such adaptations meet or exceed local code requirements.

idronics

1. INTRODUCTION

The purpose of any domestic water distribution system is to deliver fresh water at the required temperature and pressure at each point of use inside or outside a building.

Maintaining water pressure within an acceptable range is vitally important in all types of building plumbing systems. Unregulated systems can cause high mechanical stress on system components, flow noise, valve cavitation, water hammer and uncomfortably high flow rates from faucets and shower heads. Such systems also needlessly waste water, an increasingly valuable and diminishing resource.

A BRIEF HISTORY OF WATER DELIVERY SYSTEMS

Access to fresh water is essential to human life. Historically, the spread of human population across the globe was closely linked to the ability to access fresh water. The gradual improvements made to early water distribution systems unquestionably improved human health and quality of life.

For most of human history, potable water has been utilized without pressurized distribution. The vast majority of human civilizations developed near the shores of rivers and lakes, where access to clean water involved minimal transportation efforts.

The motive forces needed for water distribution were supplied through many approaches, most of which functioned by lifting water from some source, such as a lake or river, to an elevation that allowed it to flow over increasingly longer horizontal distances in open channels.

One ancient method of water elevation was the *shadoof.* Dating back to 2000 B.C. in Mesopotamia, shadoofs were made from a flexible tree branch suspended on a wooden frame. One end of the branch was lashed to a weight and the other end was attached to a bucket, as seen in Figure 1-1.

Figure 1-1



The bucket was dipped into a water source. The lever force of the shadoof helped lift the bucket to a higher elevation with far less human effort compared to dipping clay water jars or buckets directly in the water and carrying them to a higher elevation.

Multiple shadoofs, arranged in a stair-step configuration as shown in Figure 1-2, could lift water high enough to allow it to flow several hundred feet away from the shoreline. This mechanical improvement allowed for expanded water infrastructure.

Figure 1-2



Figure 1-3

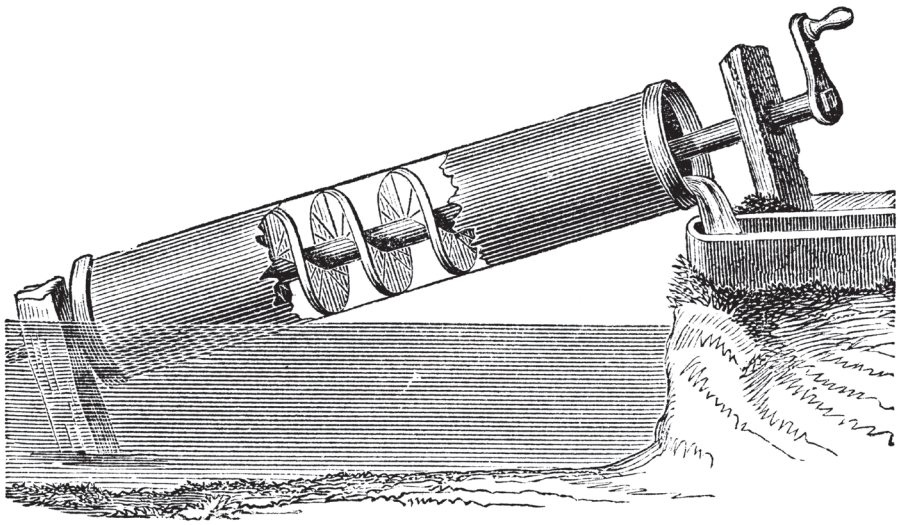

As humans developed more complex and efficient mechanisms to lift water, the distribution possibilities grew. The Archimedes screw, shown in Figure 1-3, along with other inventions by Leonardo da Vinci, used a screw-shaped auger combined with mechanical rotation to lift water. Initially, human hands turned the auger shaft. Later versions were adapted to animal power. Similar to an ox-driven rotary mill, consistent, powerful rotation increased the reliability and quantity of "lifted" water. Later, other forces, like river-powered water wheels and simple wind turbines, were utilized for lifting water from a source to a higher elevation.

Figure 1-4



In some regions, lifting water was never necessary. Early public water delivery systems were documented in modern-day Iran around 700 B.C. These systems routed water from elevated sources in the mountains above Tehran through sloped channels to pools in the city. Until 1933, these systems remained the sole source of water for Tehran.

In western civilizations, the Roman aqueducts are often cited as the benchmark for early water delivery infrastructure. In the areas surrounding Rome, a hilly landscape separates water sources and the walled city. One aqueduct, built in 144 B.C., transported water 23 miles to Rome. However, only the last seven miles of the system were aboveground. The combination of tunnels and raised aqueducts maintained the consistent slope necessary for water to flow from its source to where it was needed using only gravity as a means of propulsion.

These ancient water delivery systems transported water in open channels and at atmospheric pressure. As such, they relied solely on gravity as a means of maintaining flow. All water flowing through the open channels must have first been located at, or lifted to, a higher elevation relative to where the water was being delivered. Open channel flow also created the possibility of biological contamination.

Water delivery systems began to change as the ability to create closed pipes advanced. Early pipes made of stone, fired clay, wood (see Figures 1-5 and 1-6) and hammered sheets of lead eventually gave way to pipes fabricated of iron, concrete and other metals. These improvements, in combination with progress in methods of joining pipes together, allowed water to be maintained under pressure. This

Figure 1-5



Courtesy of Bob Rohr

greatly improved the ability to distribute water to areas that could not be served by gravity-based flow.

Today, plumbing system designers and installers have an abundance of piping materials to effectively transport water from the source to point of use.

Figure 1-6



See idronics #26 for a detailed discussion of modern piping materials and joining methods for plumbing and hydronic systems.

Currently, there are many devices available to transport water, isolate portions of water delivery systems, and control water temperature. However, one design challenge remains: *consistent pressurization*.

This issue of *idronics* discusses several scenarios where the pressure within modern plumbing systems is higher than desired for a variety of reasons. It then examines how to correct those situations through proper design and use of pressure regulating devices. The resulting systems reduce water waste, mechanical stress on plumbing components and noise. They will also deliver appropriate flow rates at plumbing fixtures and water-fed appliances.

2. PLUMBING SYSTEM PRESSURE CONCEPTS

Acceptable water pressure within a building's freshwater distribution system is generally in the range of 20 to 80 PSI, as documented in the International Plumbing Code and the Uniform Plumbing Code. This pressure range is well-suited to the piping, fittings, valves and other components used in modern building water distribution systems.

If the water pressure available at a plumbing fixture such as a faucet or shower head is too low, the flow rate from that fixture will also be low. This will inevitably lead to frustration and complaints.

When the water pressure at a fixture is too high, water will be splashed from the bowl of the sink onto the person using the sink and surrounding surfaces, as shown in Figure 2-1. Flow from shower heads operating at excessively high pressure can also be scattered and uncomfortable.

Higher-than-necessary water pressure is also much more likely to cause water waste, leading to higher water and sewer bills, and adding to water shortages in many areas of North America. Excessive water pressure also increases stress on plumbing system components, as seen in Figure 2-2.

Figure 2-1

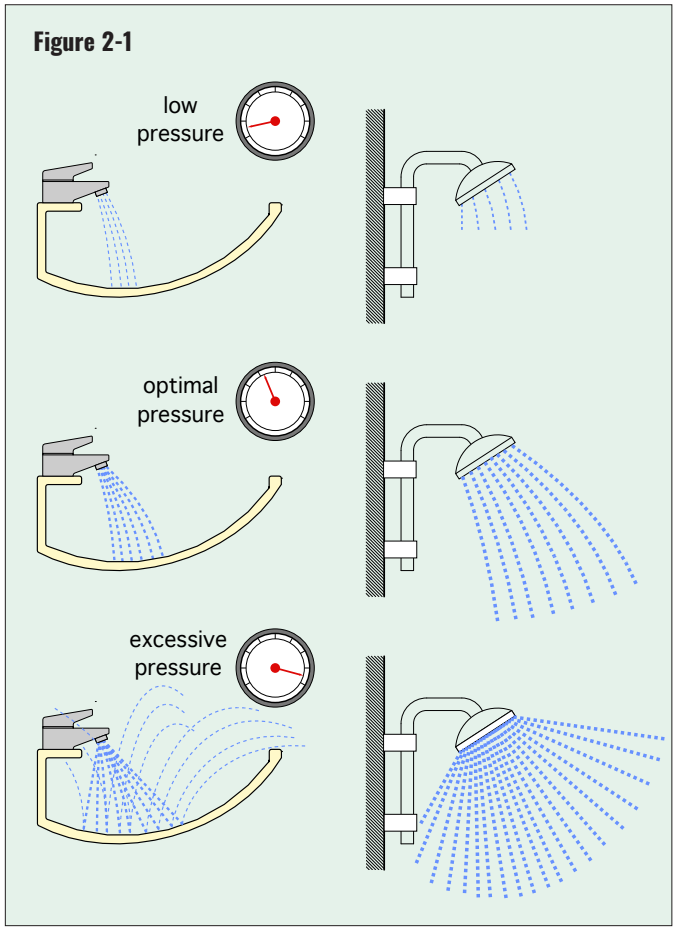

Figure 2-2

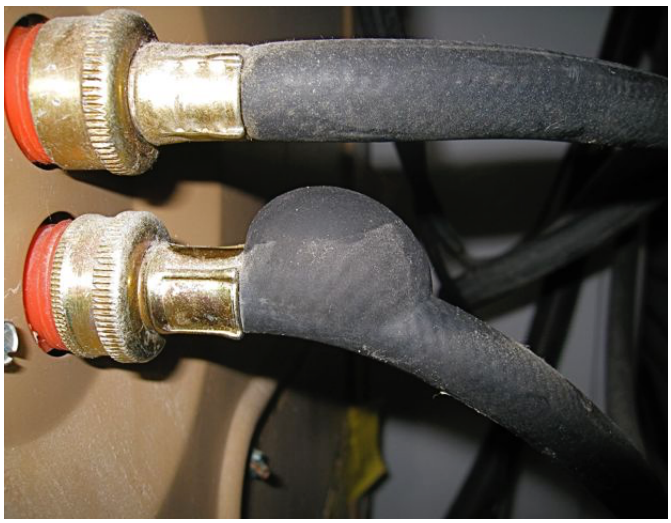

Courtesy of fairbairninspections.com

One key consideration in designing a building plumbing system that maintains acceptable pressure at fixtures is the pressure available at the location where water enters the building. Pressures that are either too high or too low at the point of entry can be caused by several factors.

LOW-PRESSURE SUPPLY SCENARIOS

The water pressure at the entry point to a building can be low for several reasons.

• If a municipal water distribution system expands to new neighborhoods, the increased flow required through existing piping leads to higher dynamic pressure losses, and subsequently lower pressure, especially at the outer extents of the distribution network. Such situations can be corrected by installing larger distribution piping or adding booster pumps, but the cost and complexity of doing so often delays or precludes such improvements.

• Many water systems in older American cities have antiquated piping materials in different parts of their distribution network. Boston, for example, has large cast iron pipes in its distribution network that are over 100 years old. These pipes, and the joints connecting them, develop leaks as a result of corrosion, breakdown of sealing systems, mechanical stress associated with underground installation, or frost penetration. Those leaks create constant water loss, which increases water flow rates through the distribution network and subsequent drops in the pressure available to buildings connected to that network. Aging pipes that operate at higher flow velocity due to an increase in the number of buildings served by the distribution network are also more prone to leaks due to metal erosion, further exasperating the problem.

• Aging water distribution piping can also accumulate scale or sediment that inhibits flow, and thus reduced water pressure, especially under high demand scenarios such as "wake-up" time in large residential neighborhoods.

• Severe drought conditions that significantly lower water levels in reservoirs can also reduce the pressure available in municipal water distribution systems.

HIGH-PRESSURE SUPPLY SCENARIOS

Water pressure at the point of entry to a building can also be too high for several reasons.

• Older, gravity-driven water distribution piping was once commonly used in multi-story buildings. These systems, some of which are still in operation, had one or more large water storage tanks on their roof, as seen in Figure 2-3.

Figure 2-3



These tanks provided a volume buffer to compensate between the rate of water use in the building, and the rate at which water could be supplied to the building from a municipal system. They were covered to reduce the potential for contamination, but they were not pressurized. The upper surface of the water in the tank remained at atmospheric pressure.

Without proper compensation, these systems create different water pressure at each floor level, as illustrated in Figure 2-4.

• In modern high-rise buildings, water is commonly pushed upward by pressure boosting pumps, such as those shown in Figure 2-5.

Figure 2-4

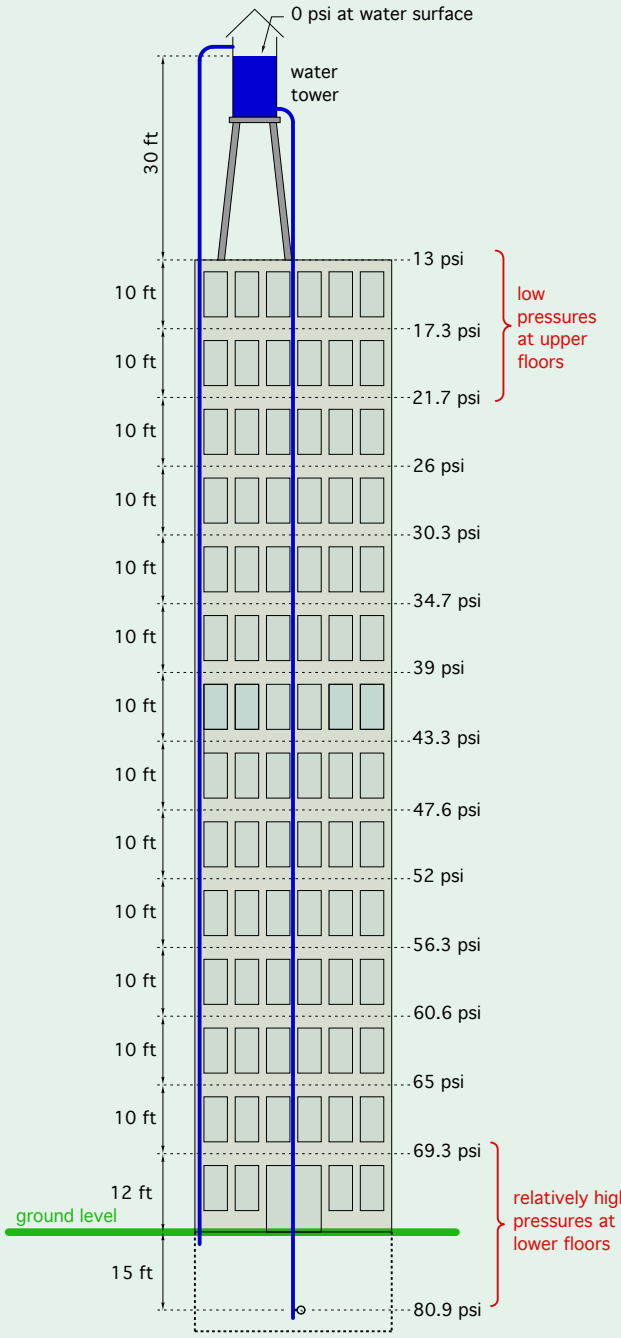

In very tall buildings, there may be several pressure boosting systems piped in series with each other. These systems, if installed without pressure reducing valves, can cause excessive water pressure in piping that's several floors above each booster pump, as shown in Figure 2-6.

Figure 2-5



Courtesy of Josh Stelter, Lyall, Thesher & Associates, Inc

Elevation changes in a municipal water distribution network can also cause complications. In hilly or mountainous regions, water pressure between several buildings on a steep slope can vary over a wide range, as see in Figure 2-7.

Without proper compensation, buildings that are served by a common water main, but vary in elevation by 200 feet or more, could have point-of-entry pressures far outside acceptable limits.

Communities built in flat geographic locations, or situations where the source water flow rate might be significantly lower than peak water demand, often have elevated municipal water storage towers, such as shown in Figure 2-9.

These towers buffer the rate of water demand in a municipal water system with the rate of water availability from wells or other sources. They can be 100 feet or more above ground level and are typically supplied by one or more pumps. Variations in water level within these towers can create changes in water main pressure, and thus changes in the pressure at the point of entry to buildings.

Figure 2-6

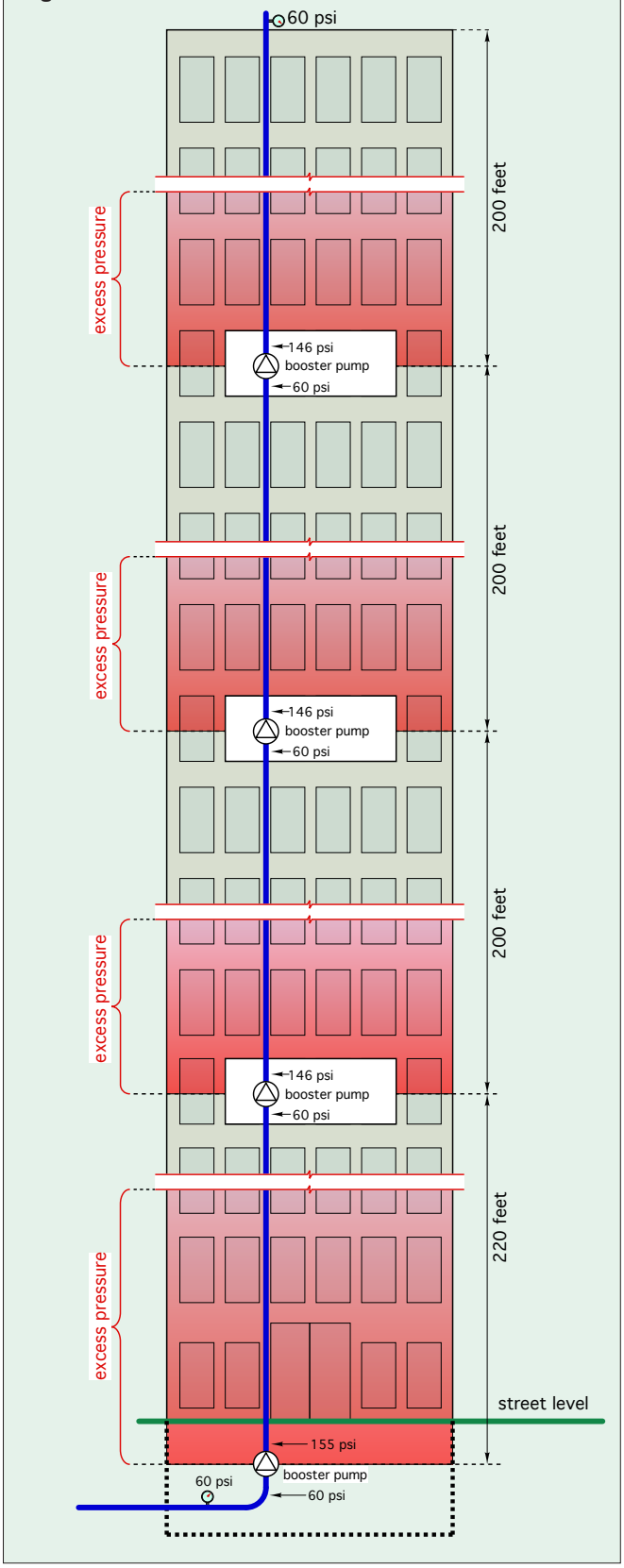

Figure 2-7

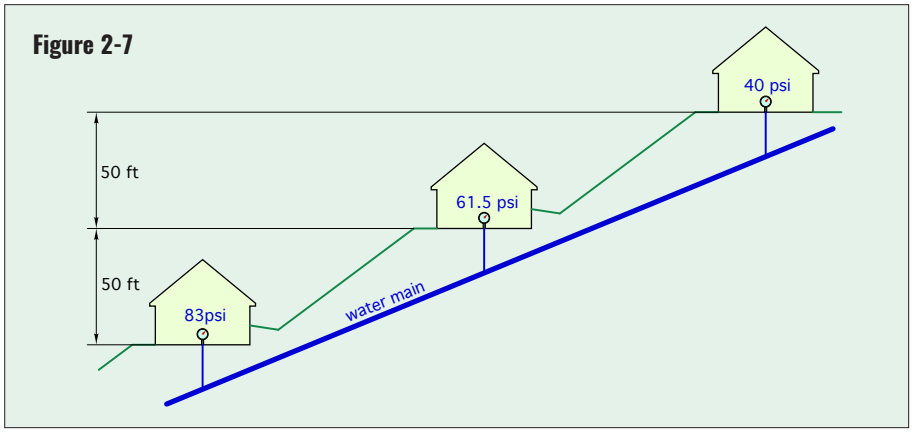

Figure 2-8



Figure 2-9



STATIC VERSUS DYNAMIC WATER PRESSURE

When discussing water pressure in piping systems, it is necessary to distinguish between *static* pressure and *dynamic* pressure.

Static pressure occurs when the water in the piping system is *not moving*. For example, if all the water fixtures in a building are off, the pressure in all parts of the building's piping system are at static pressure.

If the static pressure at one location in the system is known, the static pressure in other locations within the system are easily calculated using Formula 2-1.

Formula 2-1

$$P_S = P_{SR} \pm 0.43 \times (h)$$

Where:
P_S = static pressure at some location (psi)
P_{SR} = known static pressure at a reference location in the system (psi)
h = height of the location where static pressure is to be determined relative to the height of the reference location (feet)
0.43 = a constant based on cold water

When the location where the static pressure is to be determined is *above* the reference location, the sign in Formula 2-1 is negative (e.g., $P_S = P_{SR} - 0.43 \times h$).

For example, consider an eight-story building where the water pressure at the point of entry is 55 psi. The static pressure at a faucet located 80 feet above the point of entry would be 55-0.43 x (80) = 20.6 psi.

When the location where static pressure is to be determined is *below* the reference location, the sign in Formula 2-1 is positive (e.g., $P_S = P_{SR} + 0.43 \times h$).

Figure 2-10

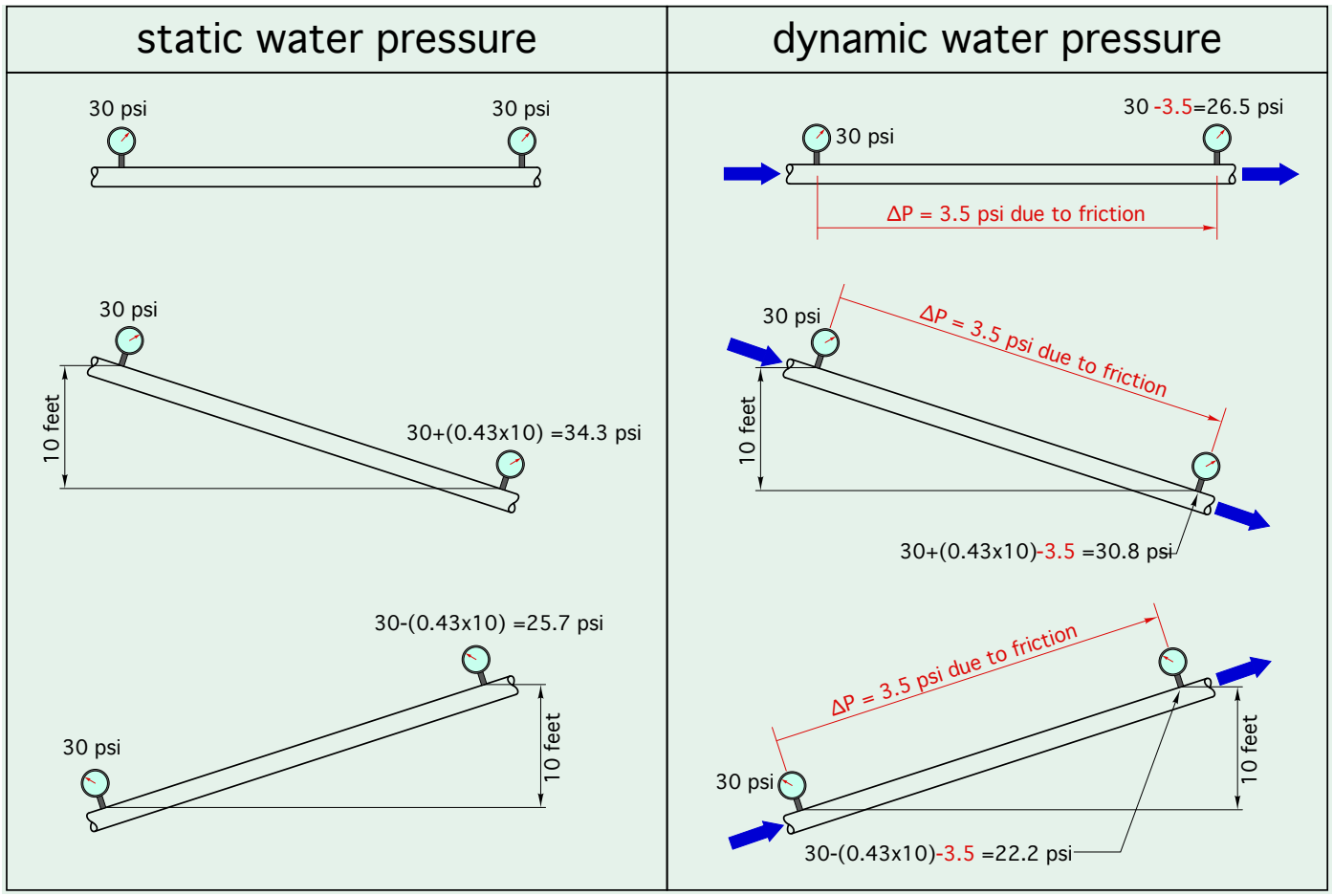

For example, consider a faucet in the underground parking garage of the same eight-story building. Assume that faucet is 20 feet below the point where the water main enters the building, and where the corresponding static pressure is 55 psi. The static pressure at that faucet would be 55 + 0.43 x (20) = 63.6 psi.

Dynamic pressure is the pressure at a location in the system when the *water is moving*. Dynamic pressure is always lower than static pressure. The decrease from static pressure to dynamic pressure is caused by friction between water molecules, as well as between those molecules and piping surfaces. The faster water moves through piping or piping components such as fittings and valves, the greater the drop in pressure.

Figure 2-10 illustrates the concepts static and dynamic pressure along pipes that are horizontal or sloping.

Notice that the combined effects of static pressure and dynamic pressure are seen in the sloping pipes that have water flowing through them.

In the case of water flowing up the sloped pipe, pressure decreases due to gain in elevation (e.g., change in static pressure), as well as pressure drop due to friction (e.g., dynamic pressure loss).

The change in pressure from static to dynamic explains why a fixture might emit a sudden short "burst" of water when it is first opened. The static pressure present before the fixture is opened immediately changes to a lower dynamic pressure due to friction in the piping leading to the fixture. This causes an immediate drop in water flow rate.

Water hammer is also caused by a sudden change from dynamic to static pressure. When a faucet or other valve is quickly closed, the kinetic energy of the water moving through the piping is immediately converted to a "spike" in static pressure. In some instances, that pressure spike can damage components in the system or even cause a pipe to burst. Water supply systems operating at higher than necessary pressure are more prone to water hammer. Systems that use fast-acting, solenoid-operated valves to allow or prevent water flow are also more prone to water hammer.

The drop in pressure due to friction (e.g., dynamic pressure loss) is also why the pressure in a municipal water system can vary with time of day. When there is a high demand for water in a neighborhood, such as during wake-up time or dinner time, higher flow rate through the water mains serving that neighborhood increases dynamic pressure loss.

CALCULATING DYNAMIC PRESSURE DROP

There are several methods for calculating the dynamic pressure drop associated with water flowing through piping. The Hazen-Williams equation is the "classic" method for making such calculations. A special form of the Hazen-Williams equation for use with copper tubing is given in Appendix B.

STABILIZING PRESSURE IN WATER DISTRIBUTION SYSTEMS

Thus far, the ability to *increase* water pressure by increasing the elevation of the water source relative to where the water is used, or through use of pressure boosting pumps, has been discussed. However, a far more common situation involves *reducing* water pressure, from the point of entry to a building to the point where water is discharged from plumbing fixtures or into an appliance.

Although it is possible to use globe-type valves to create a drop in dynamic pressure, such valves cannot reduce static pressure. They are also incapable of compensating for variations in upstream pressure. As such, manually adjusted globe valves are *not* a good choice for pressure regulation in domestic water distribution systems.

PRESSURE REDUCING VALVES — OPERATING CONCEPTS

The need for *consistent* pressure regulation in water supply systems prompted the development of specialty valves that can automatically maintain a steady and selectable downstream pressure, while also compensating for variations in upstream pressure.

The first versions of such valves date back to the early 1900s. The underlying concept involved an adjustable spring opposing the force created by water pressure against a flexible diaphragm, as represented, in simplistic form, in Figure 2-11.

Water at higher pressure is available at the valve's inlet. The valve's outlet supplies the lower pressure portion of the system. The water pressure

Figure 2-11

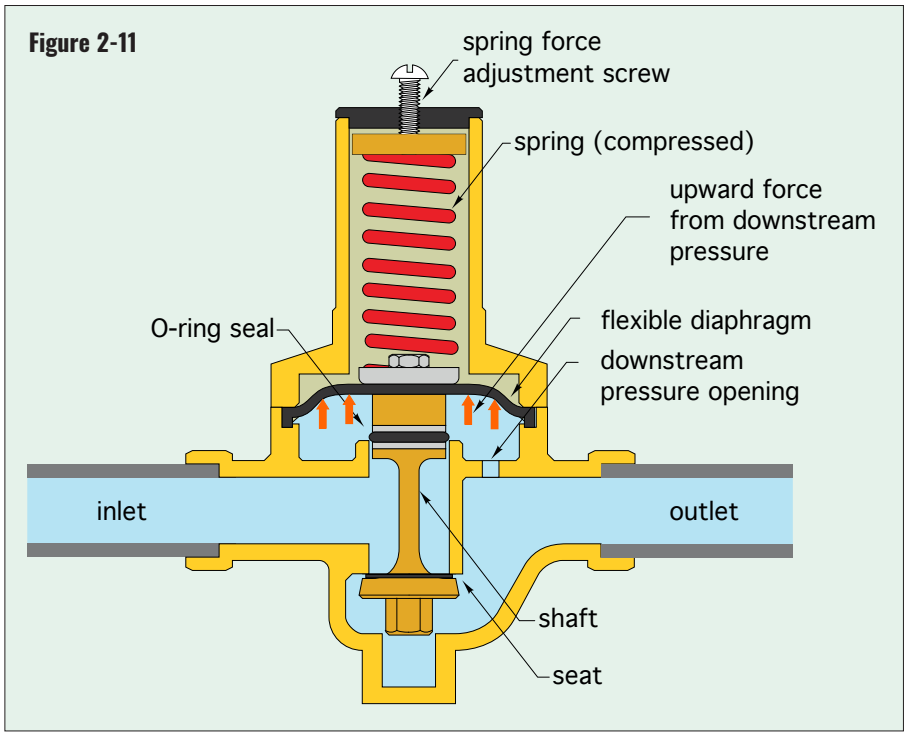

Figure 2-12

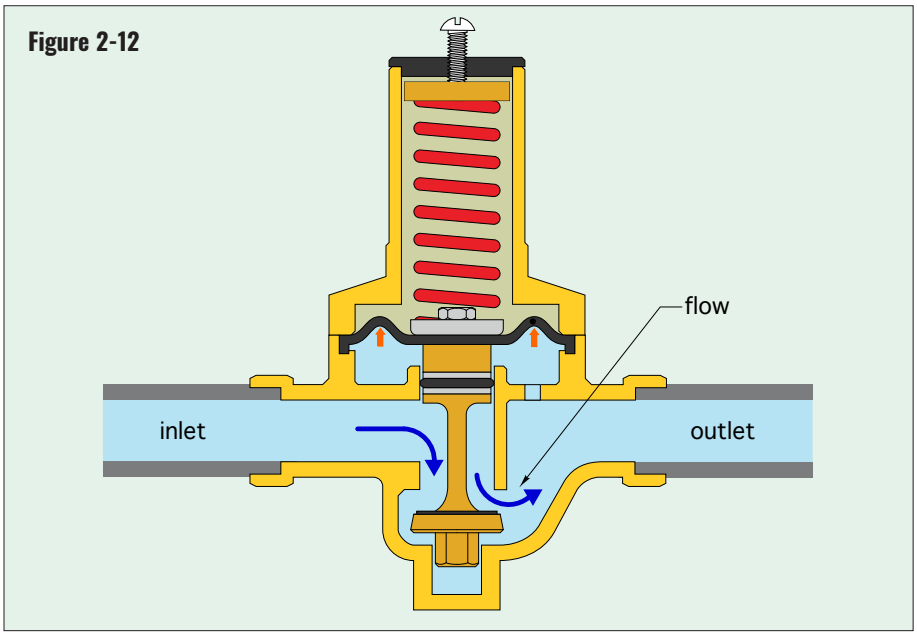

Figure 2-13a

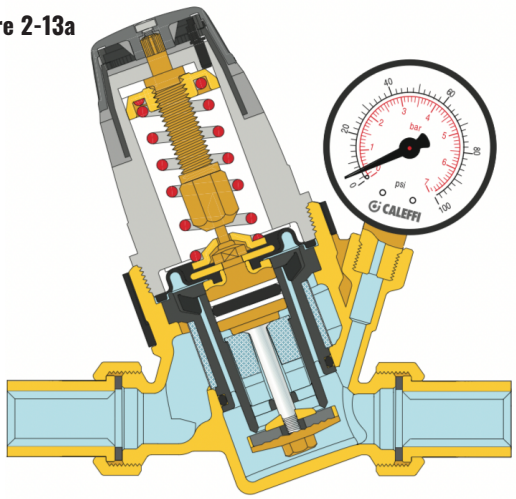

Figure 2-13b

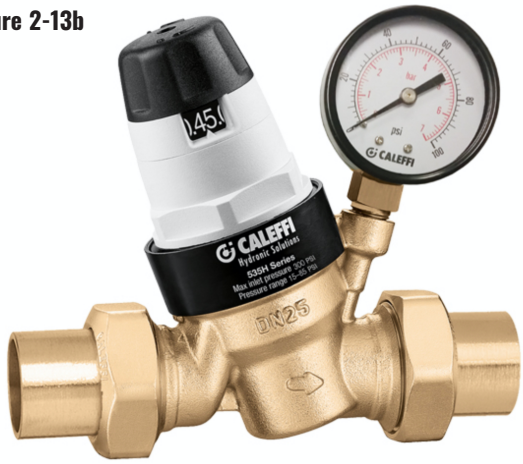

present at the outlet presses upward against the flexible diaphragm. Whenever this upward force exceeds the downward force created by the spring, the valve's disc is closed against its seat, and no water passes through the valve. This design concept is referred to as a "direct-acting" pressure reducing valve.

When the pressure at the valve's outlet decreases, such as when water is drawn from a plumbing fixture, the upward force created by this pressure acting on the diaphragm also decreases. When this upward force becomes less than the downward force created by the spring, the valve's shaft is pushed downward, moving the disc away from its seat and allowing water flow from the inlet to the outlet, as shown in Figure 2-12.

Flow continues until the pressure on the outlet side rises sufficiently to cause the force generated against the diaphragm to exceed the downward force of the spring. This condition causes the disc to close against its seat.

The pressure setting where the valve begins to allow flow is adjusted by a threaded shaft or screw at the top of the valve. When this screw is adjusted downward, the force generated by the spring increases, and so does the pressure setting of the valve.

The simplistic concepts shown in Figures 2-11 and 2-12 have been refined through decades of product improvement, including precise forging, machining, and optimal selection of both metal and polymer materials. This has led to state-of-the-art pressure reducing valves, such as the Caleffi 535H, shown in Figure 2-13.

PISTON-TYPE PRESSURE REDUCING VALVES

Another type of direct-acting pressure reducing valve that's designed for high inlet water pressure uses a piston rather than a flexible diaphragm, as illustrated in Figure 2-14.

Similar in concept to diaphragm-type PRVs, piston-type PRVs use opposing forces created by downstream water pressure and an internal spring. Downstream pressure pushes upward against the piston to oppose the (adjustable) downward force created by the spring. O-rings provide the seal between the piston and its surrounding cylinder.

When downstream pressure decreases, the spring pushes the piston downward allowing flow through the valve. Caleffi piston-type PRVs use a specially tapered shaft to reduce pressure drop as flow passes through the valve's seat.

When downstream pressure rises to the valve's setting, the upward pressure force against the piston counteracts the downward force of the spring, causing the valve to close.

Piston-type PRVs perform well in systems prone to water hammer. Frequent water hammer can be caused by solenoid valves opening and closing, say in a commercial laundry washing machine or in automated irrigation systems, as two examples. The pressure spikes created by such water hammer can eventually damage diaphragm-type PRVs.

PILOT-OPERATED PRESSURE REDUCING VALVES

The PRVs described thus far are categorized as "direct-acting." The position of the valve's shaft is entirely determined by the upward pressure of water on the downstream side of the valve, versus the downward force created by the valve's spring.

While direct-acting PRVs are suitable for most applications using pipe sizes of 2 inches or less, there are situations where pressure stabilization is required in applications with high flow rates. Examples include large commercial or industrial process applications, or firefighting applications.

Figure 2-14a

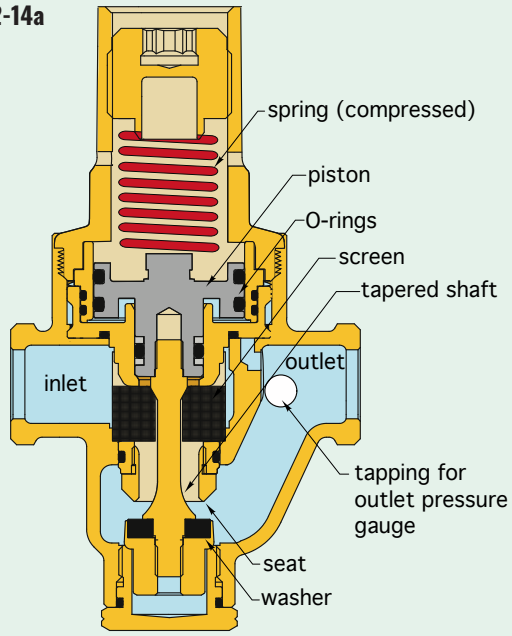

Figure 2-14b



Another type of valve, known as a "pilot-operated" PRV, is well-suited to such high flow situations.

Pilot-operated PRVs, which are often referred to as "automatic control valves," or designated as (ACV) on piping schematics, are a combination of two interconnected valves, as shown in Figure 2-15.

The small "pilot" PRV senses pressure upstream and downstream of the larger valve. However, unlike the design of a direct-acting PRV, the upstream pressure is also transferred to a pressure-tight chamber on the upper side of the diaphragm in the larger valve. This creates a downward force on the diaphragm, which acts to close the disc of the larger valve.

Figure 2-15

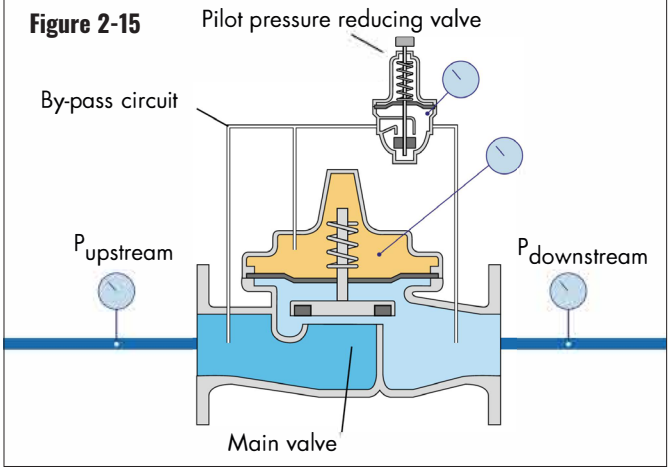

When the downstream pressure drops, flow passes through the pilot PRV. This causes some water to leave the upper chamber in the larger valve, allowing its shaft to move upward and flow to pass through.

When the downstream pressure rises to the setting of the pilot PRV, it closes. The upstream pressure increases, forcing more water into the upper chamber of the large valve. This, in turn, causes the diaphragm to move down, reducing or stopping flow through the larger valve.

Pilot-operated PRVs are an example of "pressure balanced" valves. Fluid pressure acting on the diaphragm in the upper chamber helps to balance the opposing forces created by upstream pressure acting upward on the valve's disc. This helps stabilize valve stem movement.

One distinguishing characteristic of pilot-operated PRVs is an insignificant drop in downstream pressure over a wide range of flow rates.

Figure 2-16

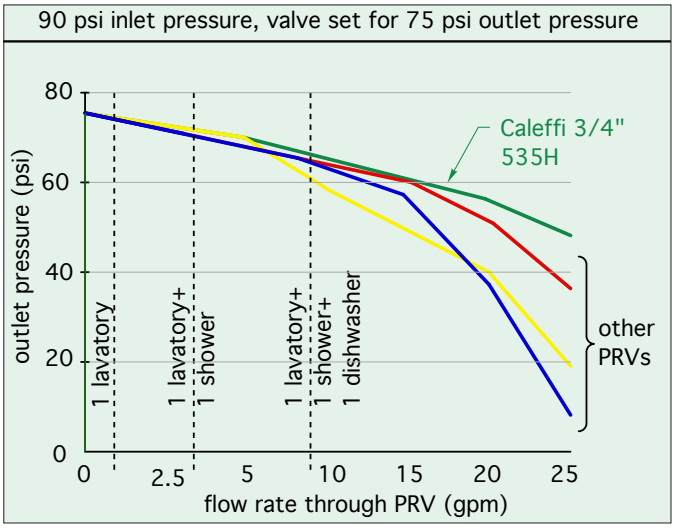

PERFORMANCE OF PRESSURE REDUCING VALVES

A hypothetically "perfect" pressure reducing valve would maintain its set outlet pressure regardless of the flow rate passing through it. Although design refinements have moved production valves closer to this ideal, all direct-acting pressure reducing valves experience some "fall off" in the downstream pressure as flow through the valve increases. This pressure drop is caused by the same dissipation of hydraulic head energy that occurs through any type of valve used in a hydronic heating or cooling system.

Figure 2-16 shows a comparison between the outlet pressure maintained by a Caleffi 535H valve and several other PRV products, as a function of water flow through those valves.

At low flow rates, most of the valves represented can accurately maintain the set outlet pressure. However, as additional fixtures or appliances start to draw water through the valve, the ability of the valve to maintain its set outlet pressure drops. Of the valves represented in Figure 2-15, the Caleffi 535H has the least "fall off" in outlet pressure at the higher flow rates. This is in part due to the tapered shaft design, which reduces frictional losses through the valve.

PRESSURE REDUCING VALVE SIZING

All valves must be sized correctly for optimal performance. The starting point is to determine the design water flow rate through the valve based on the downstream fixture demand. *The connection pipe size of Caleffi pressure reducing valves should then be selected so that the design flow rate corresponds to a flow velocity between 3 to 6 feet per second.* This range of flow velocities allows the valve to operate with minimal sound. It also increases the life of components that could be damaged over time by operating at excessively high flow velocity. The table in Figure 2-17 can be used to match the pipe size of the Caleffi 535H series valves to a design flow rate.

Figure 2-17

	Design Flow Rate					
Size	½"	¾"	1"	1¼"	1½"	2"
gpm	4 to 7.3	7 to 12.5	10 to 19	17 to 34	24 to 44	37 to 70

Figure 2-18

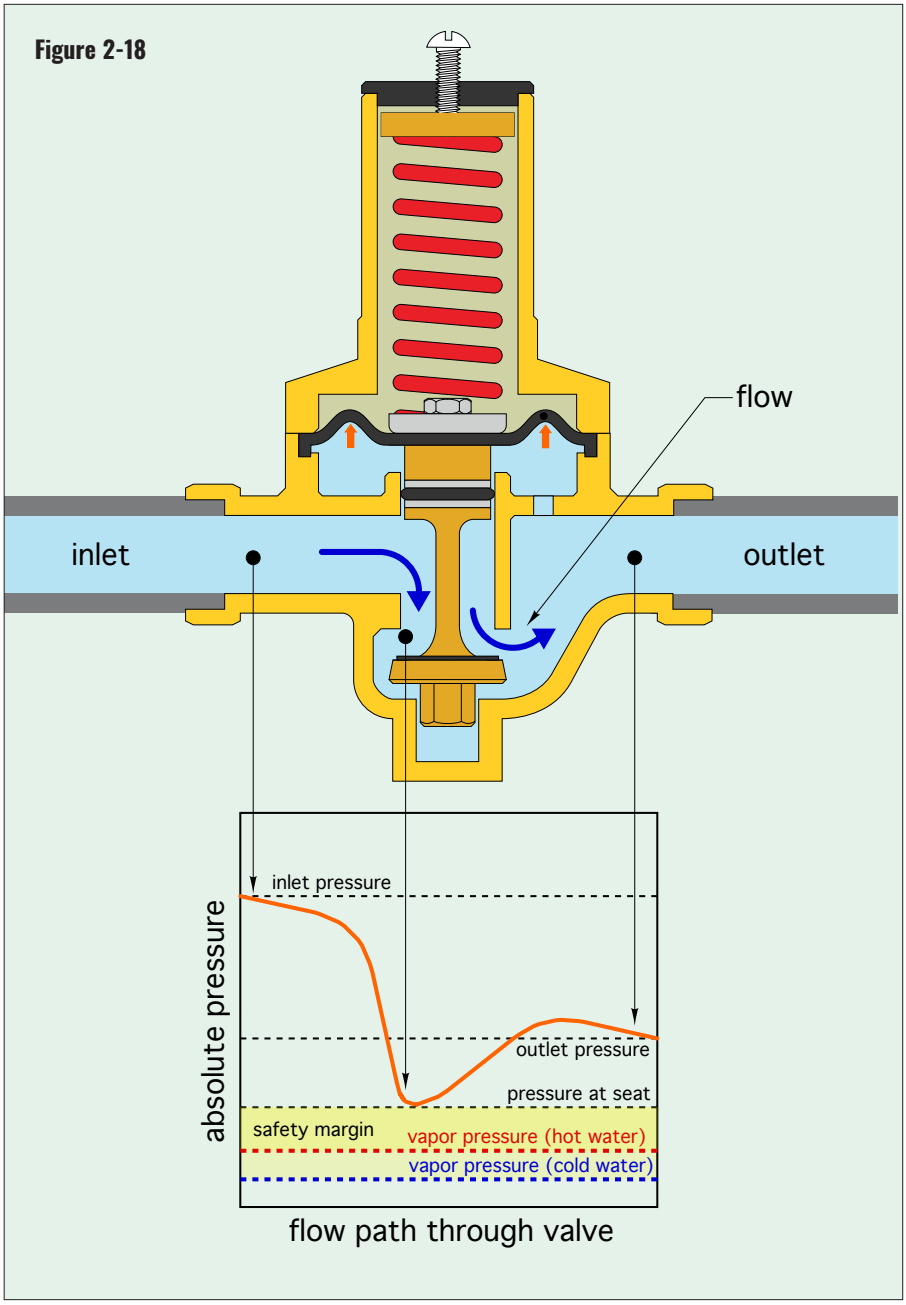

PRESSURE REDUCTION RATIO

Pressure reducing valves are designed to maintain relatively stable outlet pressure over a range of inlet pressures. However, there are limitations that must be respected

to maintain quiet operation and ensure longer service life. One of those limitations is pressure reduction ratio, which is simply the maximum inlet pressure at which the valve is applied, divided by the minimum outlet pressure it is expected to maintain.

$$\text{Pressure reduction ratio} = \frac{\text{maximum inlet pressure (psi)}}{\text{minumum outlet pressure (psi)}}$$

Pressure reduction ratios of 2:1 are fine. Slightly higher ratios are possible but should never exceed 3:1.

Applying any pressure reducing valve at an excessively high-pressure reduction ratio will cause cavitation within the valve and noise. Over time, such cavitation can cause erosion and eventual failure.

Figure 2-18 illustrates how the pressure of water changes as it flows through a pressure reducing valve.

Notice the sharp drop in pressure as water passes through the valve's seat. To prevent cavitation, the pressure at the valve's seat must remain above the vapor pressure of the water. The smaller the pressure reduction ratio, the greater the safety margin against cavitation. This is especially important when using a PRV with hot water, since vapor pressure increases with increasing temperature.

MANAGING HIGH PRESSURE REDUCTION RATIOS

When the required pressure reduction ratio is greater than 3:1, the solution is "2-stage" pressure reduction. This involves two pressure reducing valves connected in series, as shown in Figure 2-19.

In Figure 2-19a, the upstream water pressure is 250 psi and the desired downstream pressure is 60 psi. These pressures represent a pressure reduction ratio of 250/60 = 4.17, which is higher than the allowed 3:1 ratio.

Figure 2-19a

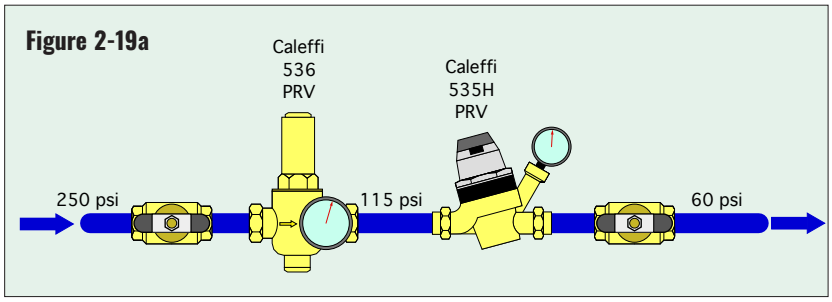

Figure 2-19b

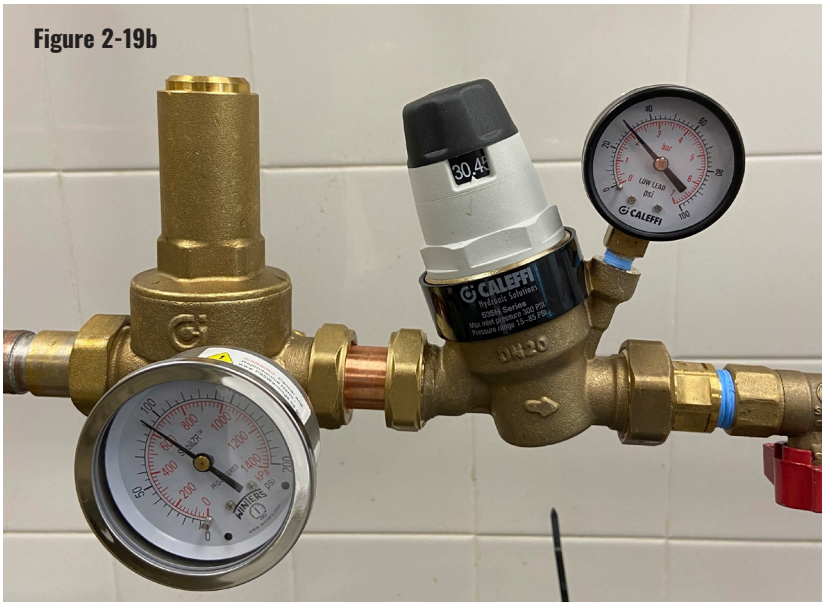

The scenario shown in Figure 2-19 uses a Caleffi 536 PRV to reduce the incoming pressure from 250 to 115 psi. The pressure reduction ratio is 250/115 = 2.17, which is fine.

The 115 psi present at the inlet of the Caleffi 535H PRV is further reduced to 60 psi. The pressure reduction ratio is 1.92, which is also fine.

When connecting PRVs in series, the piping between the valves should be as short as possible. This minimizes the fluid volume between the valves, which could undergo pressure changes due to thermal expansion.

MINIMUM FLOW RATES FOR PRESSURE REDUCING VALVES

Another important selection criterion is the *minimum* flow rate at which the valve is expected to maintain its set output pressure. The Caleffi guideline is that the minimum flow rate should correspond to a flow velocity of 1.0 feet per second. Figure 2-20 shows flow rate corresponding to 1 foot per second for copper tubing in sizes from 1/2-inch to 2-inch.

Flow rates below these minimums increase the likelihood that the pressure reducing valve may chatter or vibrate as it "hunts" for a stable operating condition.

Figure 2-20

tube size	1/2"	3/4"	1"	1.25"	1.5"	2"
min. flow rate	0.8 gpm	1.6 gpm	2.8 gpm	4.1 gpm	5.7 gpm	9.9 gpm

Figure 2-21

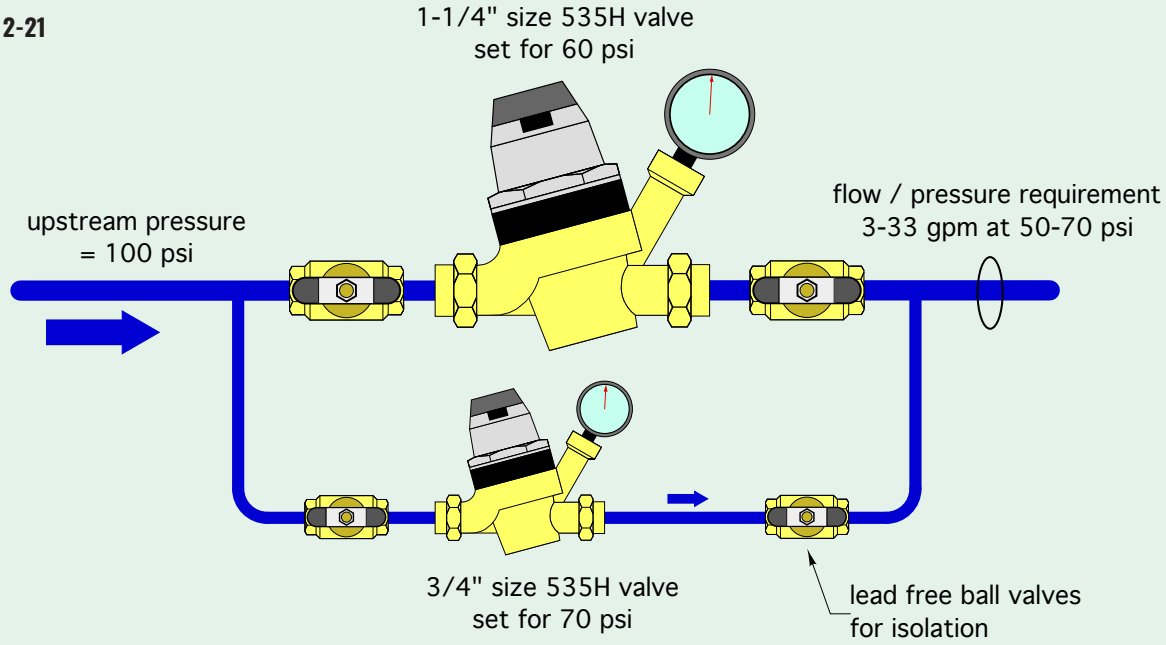

Figure 2-22

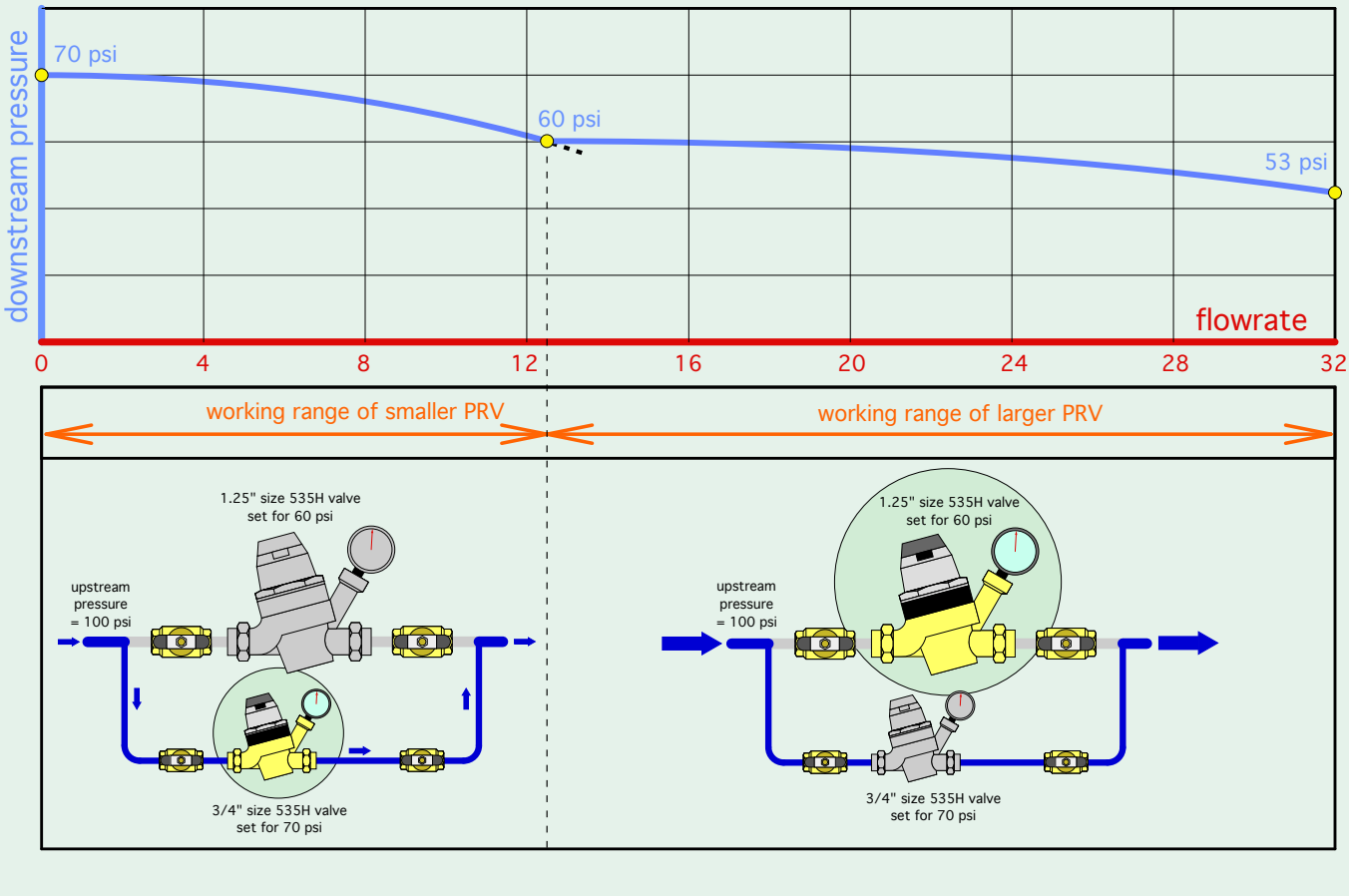

MANAGING A WIDE RANGE OF FLOW RATES

It is common to encounter situations in which the range of possible water flow rates is wider than the rated operating range of a single pressure reducing valve. For example, consider a flow rate range of 3 to 33 gallons per minute. The maximum flow rate could be handled by a 1.25-inch Caleffi 535H PRV. However, the lower end of the range — 3 gpm — is less than the minimum flow rate for the 1.25-inch valve. A 3/4-inch or 1-inch PRV could handle the minimum flow rate, but neither are rated to handle 33 gallons per minute.

The solution to this situation is to install two pressure reducing valves of different size in parallel, as shown in Figure 2-21.

When the downstream flow is about 3 gpm, the smaller PRV handles pressure regulation, maintaining a downstream pressure of about 69 psi. The upper valve is not passing any flow since the downstream pressure is currently above its setting of 60 psi.

As the downstream flow requirement increases, the pressure drop (e.g., "fall-off" pressure) across the smaller valve increases. At 12 gpm flow, the fall-off pressure across the small valve is about 9 psi. If the larger valve is set for 60 psi, it is on the verge of opening. Any further increase in flow will allow the larger valve to operate, and initially maintain downstream pressure at or slightly below 60 psi. If flow reaches approximately 32 gpm, the large valve will stabilize downstream pressure at about 53 psi. The 7 psi drop below its setting is again due to "fall off" caused by increasing flow rate. Figure 2-22 shows this overall flow rate versus downstream pressure example.

In this example, the downstream pressure varied from about 70-53 psi, which is within the specified acceptable range of 50-70 psi.

Lead-free ball valves are shown on both sides of both pressure reducing valves. These allow each valve to be isolated and serviced if necessary. Typical servicing includes checking the internal screen and valve seat, and cleaning them when needed. The ball valves also allow either PRV to be isolated for replacing the internal pressure regulating assembly, if ever necessary.

It's possible to create systems with more than two PRVs in parallel. This allows a narrower range of downstream pressure regulation, but also adds to installation cost.

Figure 2-23



3. APPLYING PRESSURE REDUCING VALVES

This section describes typical applications for Caleffi pressure reducing valves in freshwater distribution systems.

POINT-OF-ENTRY PRESSURE REDUCTION

One of the most common applications is as a point-of-entry pressure regulator on the cold-water service pipe supplying a building. The preferred location for the valve is inside the building, and just downstream of the water meter, as shown in Figure 3-1.

This arrangement subjects the water meter to the full pressure of the water entering the building. Some code jurisdictions may allow the water meter to be located downstream of the PRV. This reduces the pressure to which the water meter is subjected. Always verify what arrangements are allowed by the authority having jurisdiction.

The ball valves shown in Figure 3-1 allow water service to the house to be turned off. Their placement also allows

Figure 3-1

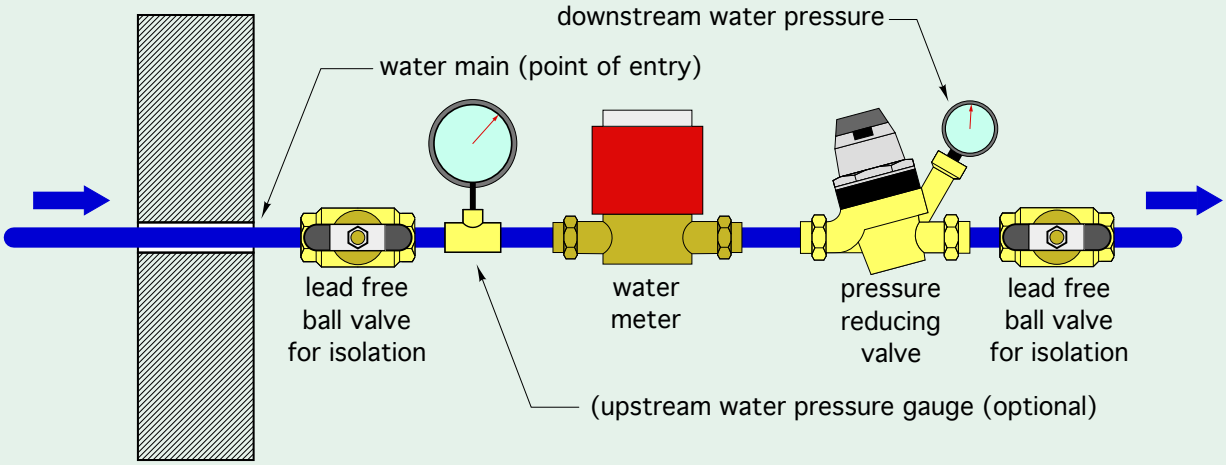

Figure 3-2

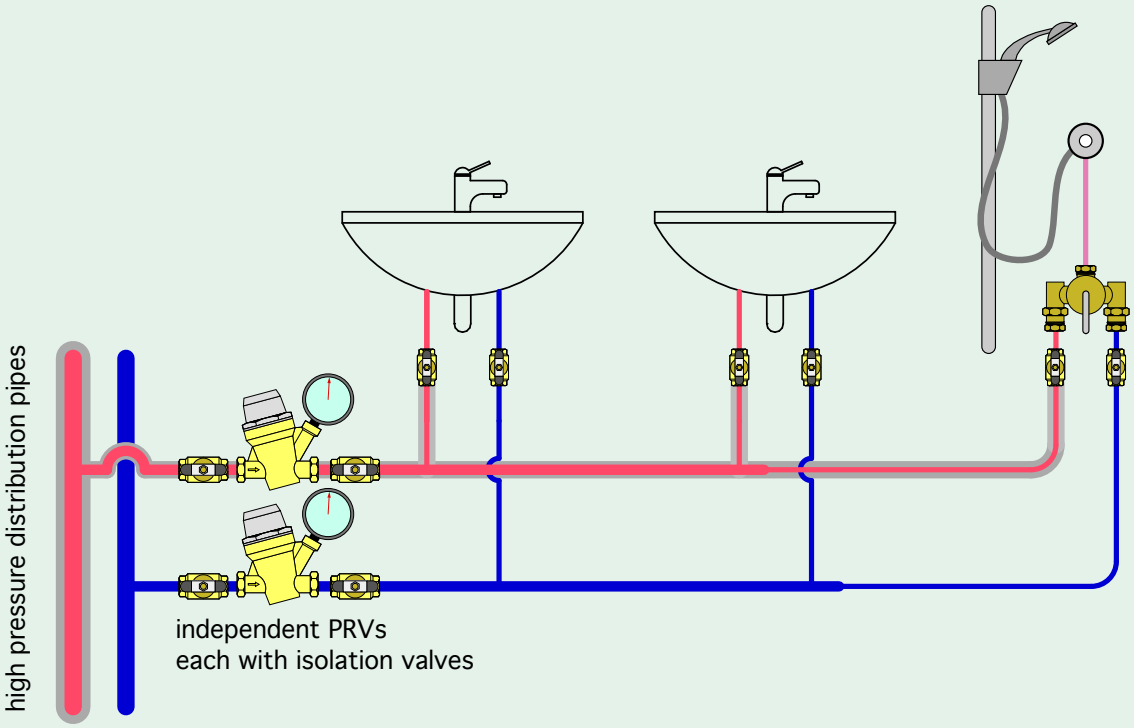

the water meter or the pressure reducing valve to be isolated if either requires service. An optional upstream pressure gauge is shown (where allowed by code).

INDEPENDENT HOT & COLD WATER PRESSURE REDUCTION

Caleffi pressure reducing valves can be used on both hot and cold water plumbing. The maximum hot water temperature for Caleffi pressure reducing valves is 180ºF.

Figure 3-2 shows an example of two Caleffi 535H valves that control pressure to a group of plumbing fixtures supplied by building distribution piping operating at high pressure.

Using two independent valves allows for pressure variations in the hot and cold water distribution system. Such variations are common based on different pipe lengths, fittings count or pressure drops through heat source equipment in the hot water distribution system.

When the building is equipped with a recirculating domestic hot water system, *pressure reducing valves should not be installed in any of the recirculating piping*. They can, however, be installed on "dead-end" runs that tap into the recirculating circuit. In small systems, where pressure variation between the hot and cold water distribution piping is minimal, it is generally acceptable to install a single PRV on the cold water piping leading to the system, as shown in Figure 3-3.

See idronics #22 for a detailed discussion of recirculating domestic hot water systems.

When several fixture groups are supplied by a set of hot and cold domestic water pipes, one option would be to install a PRV on each of the riser pipes and set them for the desired downstream pressure. This concept is shown in Figure 3-4.

Figure 3-3

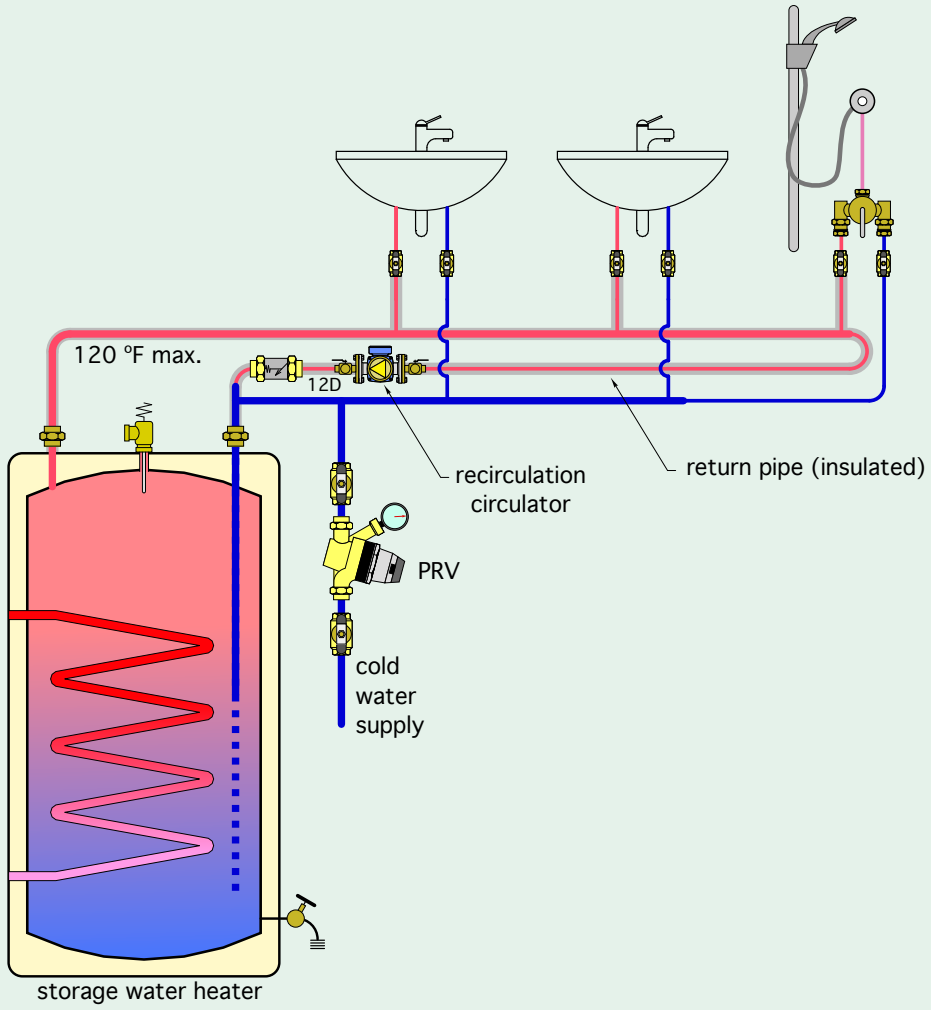

However, this approach has several drawbacks. First, it does not prevent pressure variations due to the different elevations of the fixture groups. Second, it does not compensate for dynamic pressure drop along the risers, which increases during typical periods of high demand when many of the fixture groups are operating. *This undesirable effect would also be present if the fixture groups were located at the same elevation in the building*. Third, using a

Figure 3-4

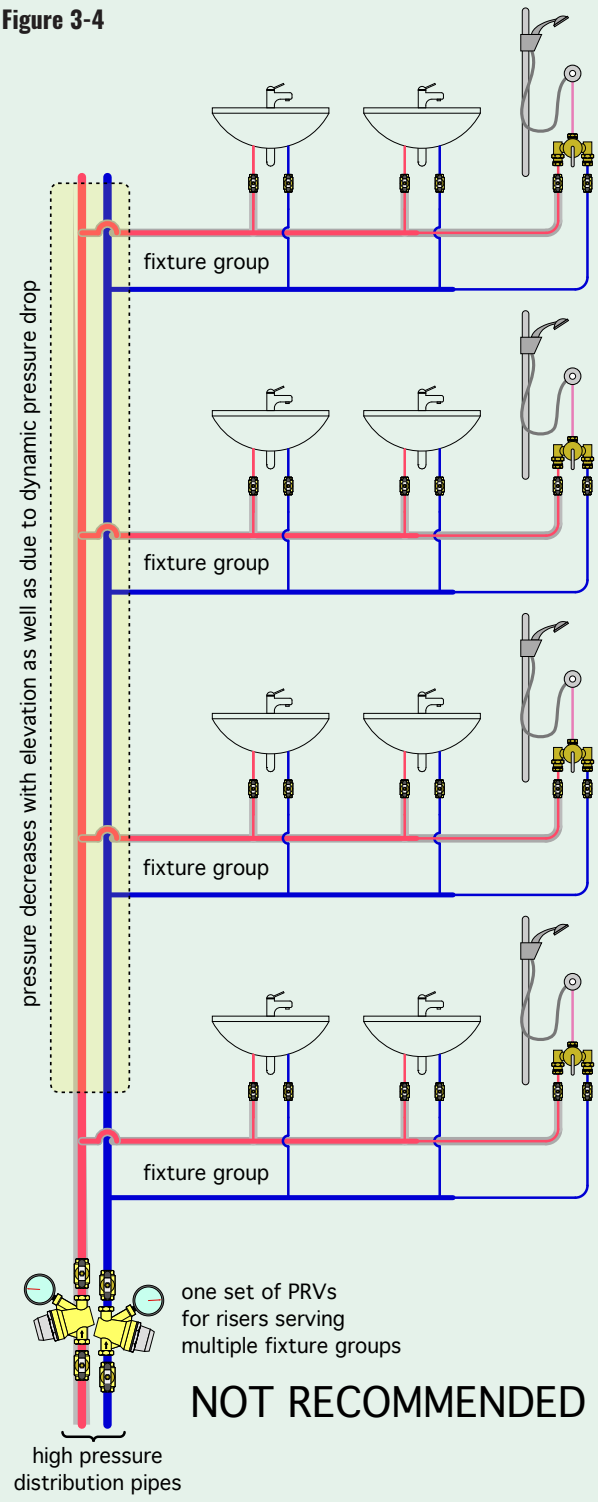

Figure 3-5

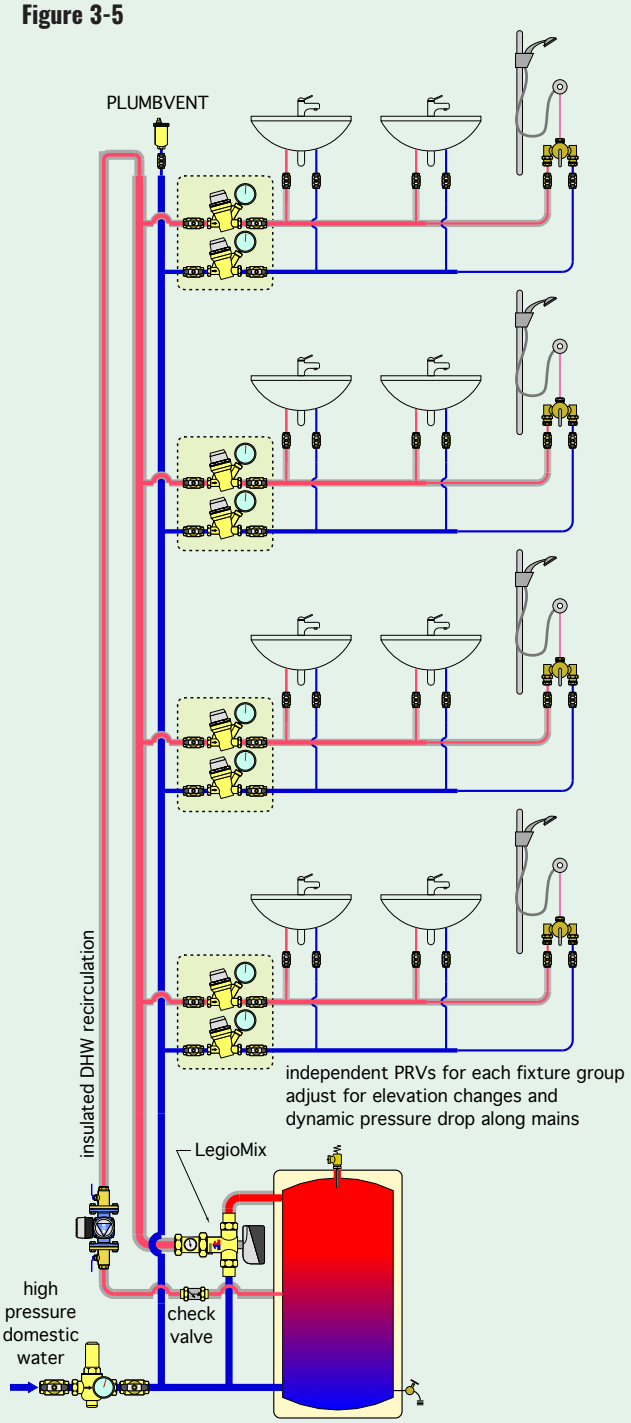

single pair of PRVs on the risers does not allow domestic hot water recirculation. Given these shortfalls, this is not a recommended approach.

A better option is to locate a pair of PRVs upstream of each fixture group, as shown in Figure 3-5.

This arrangement eliminates all of the previously stated issues associated with a single pair of PRVs on each riser. It allows for pressure compensation based on elevation, dynamic pressure drop along the risers, and hot water recirculation.

OUTDOOR MOUNTING

It is possible — although not preferred — to mount a pressure reducing valve outside of the building it serves. Such mounting is more common for buildings located in mild climates with slab-on-grade foundations. However, *this should never be done in any location where outdoor temperature could drop to at or below freezing.*

Figure 3-6a



Figure 3-6b



Courtesy of Osborne Company

Figure 3-6a shows an example of a pressure reducing valve that is mounted outside a house between two riser pipes.

If the valve is mounted outside, its polymer components are exposed to ultraviolet radiation from the sun. Caleffi offers a UV shield that can be installed over the polymer portion of the 535H PresCal valve, as shown in figure 3-6b. This shield is only intended to protect the valve from UV radiation. It does not protect the valve from tampering, freezing or physical damage. The external surfaces of the Caleffi 536HP pressure reducing valve are brass, and as such do not require UV shielding.

If the valve is to be mounted outside, the preferred method is to house it and its associated isolation valves in a buried "vault" box, as illustrated in Figure 3-7. This mounting can prevent unauthorized access, protect the valve from UV radiation and physical damage, and provide some measure of protection against short-duration sub-freezing air temperatures.

Figure 3-7

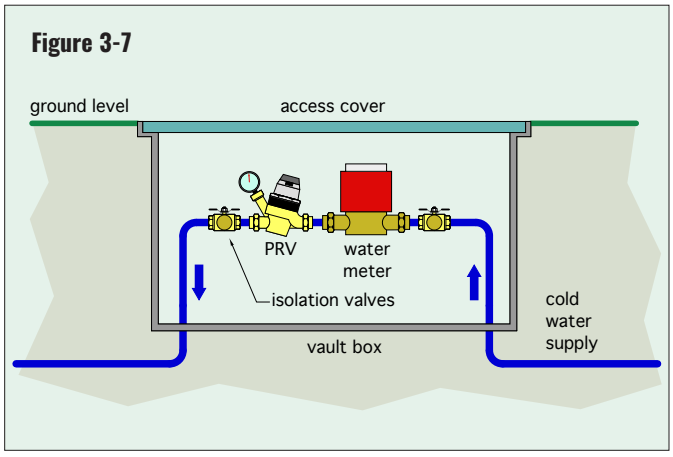

MAINTAINING PRV PERFORMANCE

Caleffi pressure reducing valves are designed for long life and minimal maintenance. They include a stainless steel inlet screen designed to capture dirt carried into the valve by upstream flow. The dirt could be present due to large flow disturbances in municipal mains, such as following repair of a water main. It can also come from corrosion or erosion of the upstream piping. Over time, dirt carried into the valve will accumulate on the inlet screen, as shown in Figure 3-8.

Heavily encrusted inlet screens will reduce the flow capacity and the pressure regulation accuracy of the valve. Very fine dirt particles may be able to pass through the screen and collect on the valve's precision-machined seat, as shown by the arrow in Figure 3-9.

Figure 3-8



Figure 3-9

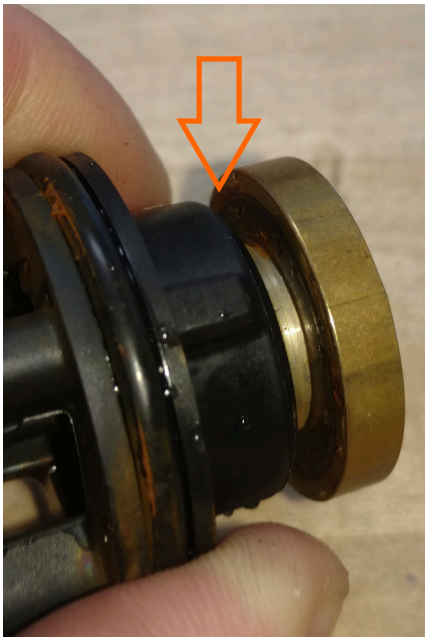

Dirt accumulation on the valve's disc or seat can prevent pressure-tight closing, causing the pressure on the downstream side to creep above the valve's set pressure during periods of no water demand.

Dirt accumulation on the inlet screen or valve seat is easily removed. Start by closing the isolation ball valves on each side of the PRV. Then unscrew the pressure regulating cartridge from the valve's base. This exposes the screen and disc assembly. Most debris can be removed from the screen and seat area using an old toothbrush along with a detergent. After cleaning both the screen and disc/seat area, the cartridge can be reinstalled on the base and the valve returned to service.

OTHER TROUBLESHOOTING SCENARIOS

1. Symptom: The PRV is making a chattering noise during periods of low water demand.
Likely cause: If a PRV is *oversized* for the flow rates required, it can "hunt" for the proper modulation. This can occur when the flow velocity is under 1 foot per second in an oversized valve. Under such conditions, the valve can't find equilibrium, so the seat oscillates open and closed rapidly, causing the chatter sound.

Corrective action: Select a PRV based on its rated flow rate range. Keep in mind that a properly sized PRV *may not always match the pipe size at the location where it is installed in the system.* As an example, a 1" PRV might be the proper selection for the maximum flow demand, even if the water meter and piping to the rest of the system is engineered to be 1-½". In commercial settings, consider installing a high/low PRV assembly (two PRVs in parallel, as shown in Figures 2-20 and 2-21), which can modulate down to the lowest flow requirement while also meeting the highest flow demand.

---

2. Symptom: The PRV makes a high-pitched noise during periods of high water demand, but when the demand decreases, the noise goes away.

Likely cause: The PRV may be undersized for the maximum flow rate required. For example, a building expansion may result in more fixtures connected to the same water supply main. The maximum flow rates may now be higher than the flow for which the PRV was sized.

Corrective action: The PRV may need to be replaced with a larger PRV. Always consult the product literature for proper sizing based on maximum flow rates and a velocity range of 3-6 feet per second.

---

3. Symptom: The flow rate at all of the fixtures has diminished over time.

Likely cause: Debris in the system can build up and slowly clog plumbing components. This can occur when the system is commissioned due to debris in piping that migrates into the PRV. Clogging can also occur after service work on municipal water mains or following a large water drawdown in a well. Debris from corroded piping can also get carried into the screen of the PRV.

Corrective action: If *all* of the fixtures in the system are experiencing reduced flow, a good place to start is as close to the water meter as possible. Turn off the main water supply isolation valve. Next, remove the cartridge assembly from the PRV and clean it using an old toothbrush and detergent. Be sure to clean the

disc and valve seat, as well as the screen. Reinstall the clean cartridge and open the water main valve. If the system flow returns to normal, no further action is needed. If the flow rate is still diminished, check for debris in any downstream components containing screens or filters. If the clogging persists, consider adding a wye strainer, rated for domestic water service, upstream of the PRV to reduce the need to disassemble the PRV for cleaning.

SUMMARY

The proper delivery of domestic hot and cold water requires attention to pressure variations from the water source. Excessively high pressure can lead to several problems, both for the components of the plumbing system, as well as the building occupants using fixtures and appliances.

Fortunately, automatic pressure regulation is simple to achieve using modern pressure reducing valves. When properly sized, these valves continuously adapt to potentially wide fluctuations in supply water pressure, enabling consistent and enjoyable use of fixtures, as well as extending the life of plumbing system components.

APPENDIX A: CALEFFI HYDRONIC COMPONENTS

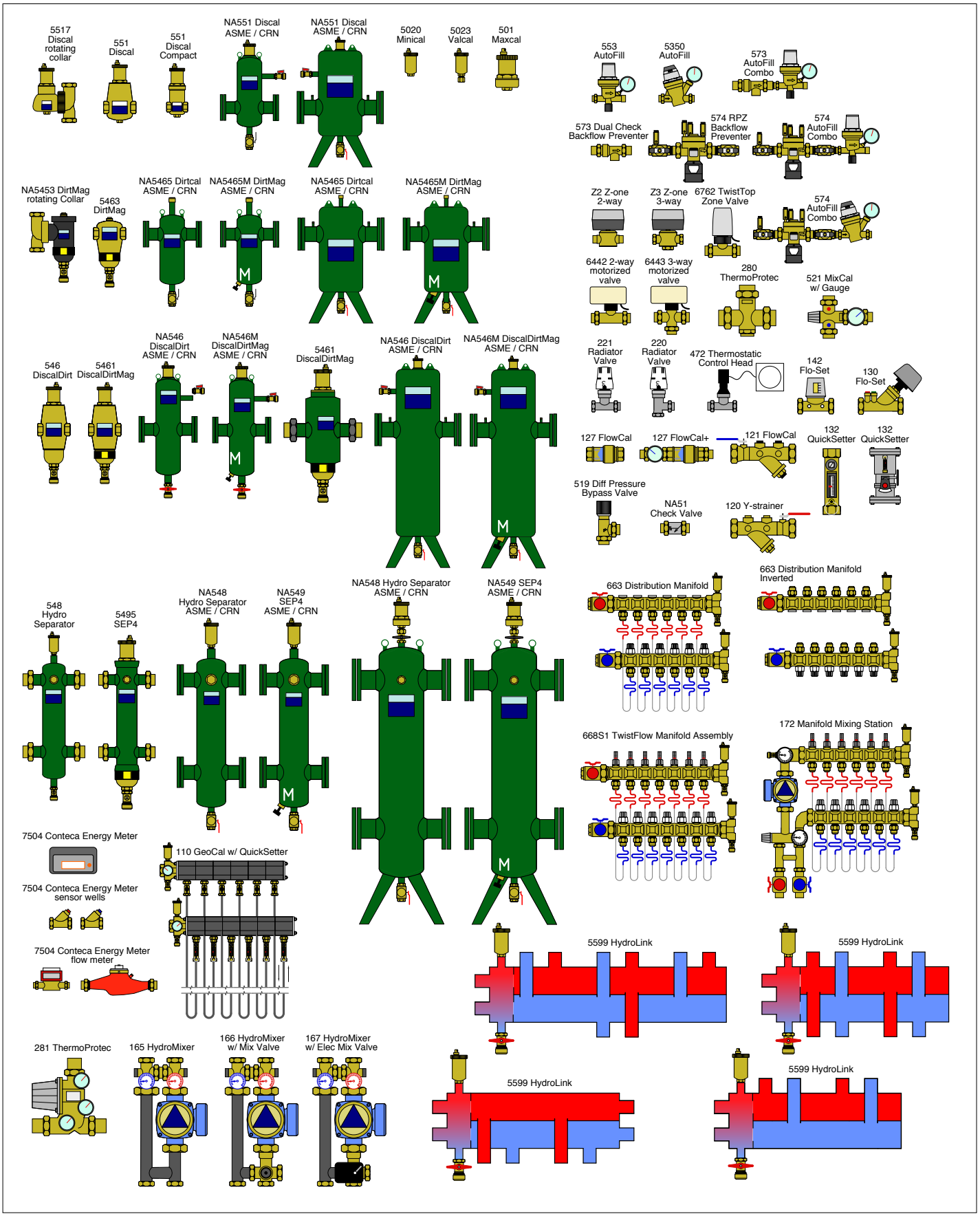

APPENDIX B: CALEFFI PLUMBING COMPONENTS

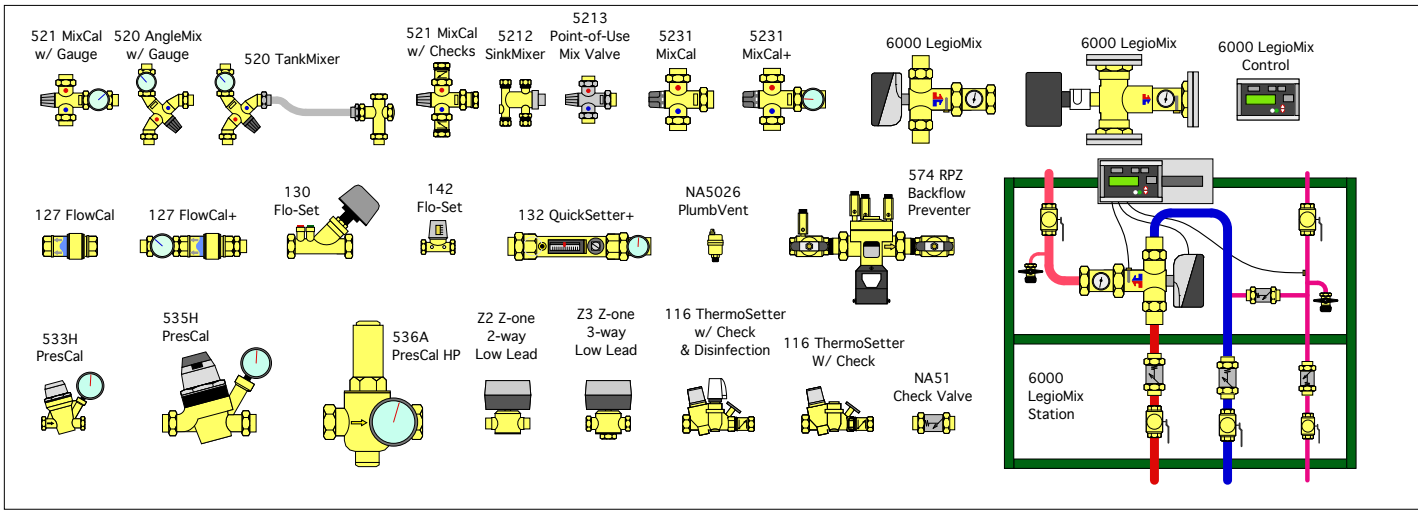

APPENDIX C: GENERIC COMPONENTS

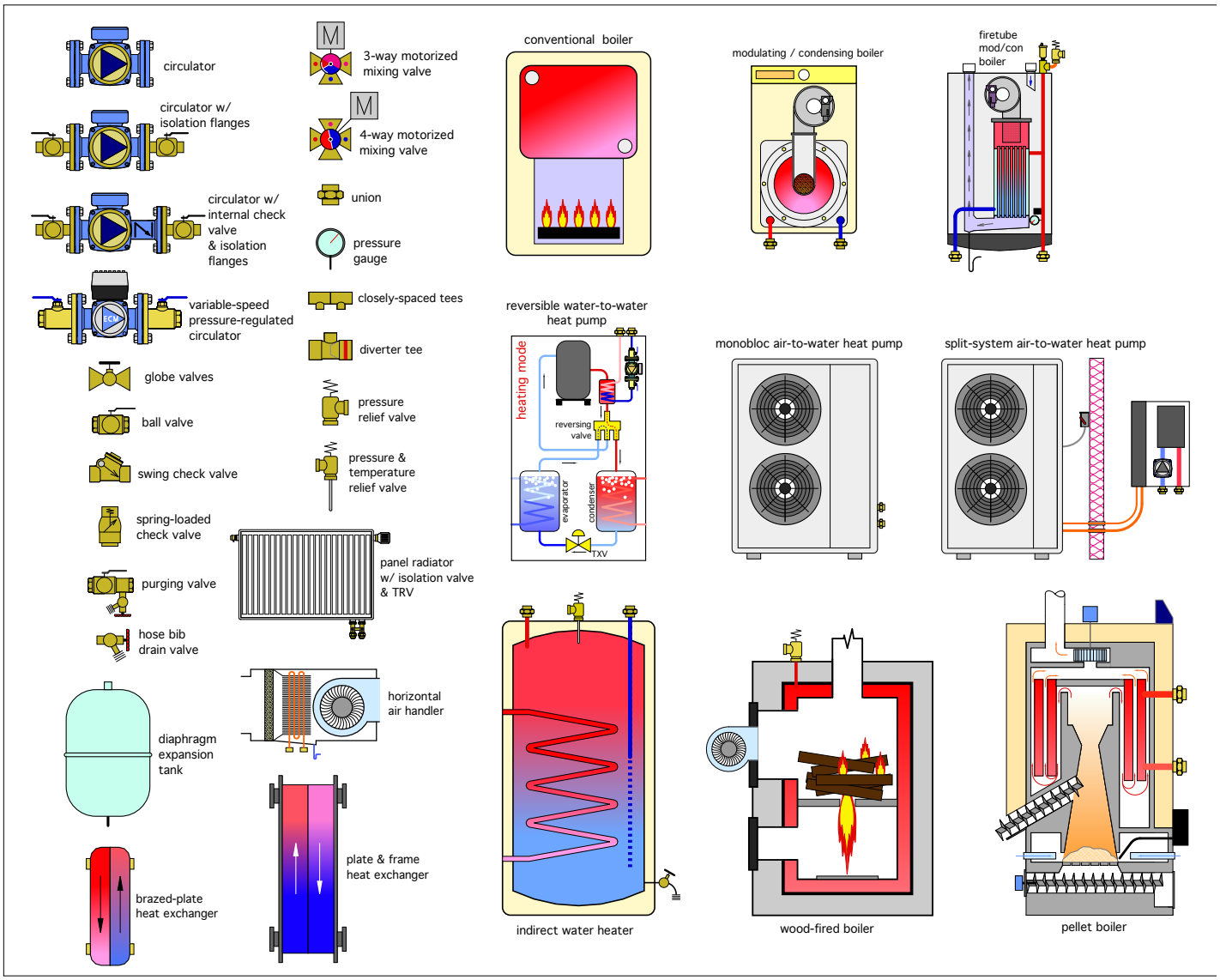

APPENDIX D: PRESSURE DROP FOR COPPER TUBING

The frictional (e.g., dynamic) pressure drop created as cold (nominal 60ºF) water flow through copper tubing can be estimated using the Hazen-Williams Formula.

Formula B-1:

$$\Delta P = \frac{0.000426\left(f\right)^{1.85}}{\left(d_i\right)^{4.87}}$$

Where:
ΔP = pressure loss through copper tubing (psi/ft)
f = flow rate of cold water (gpm)
d_i = exact inside diameter of tubing (inches)

For example: Determine the pressure drop through 150 feet of 3/4" type L copper tube as water flows through it at 6 gallons per minute.

Solution: The exact inside diameter of 3/4" Type L copper tube is 0.785 inches. Putting this value and the other given conditions into Formula B-1 yields:

$$\Delta P = \frac{0.000426\left(f\right)^{1.85}}{\left(d_i\right)^{4.87}} = \frac{0.000426\left(6\right)^{1.85}}{\left(0.785\right)^{4.87}} = 0.0381\frac{\text{psi}}{\text{ft}}$$

The final step is to multiply the pressure drop per foot by the total length (150 ft).

$$\Delta P_{total} = \left[0.0381\frac{\text{psi}}{\text{ft}}\right]150\text{ft} = 5.72\text{psi}$$

CALEFFI
Hydronic Solutions

www.caleffi.com

AWARD WINNING PLUMBING INNOVATION

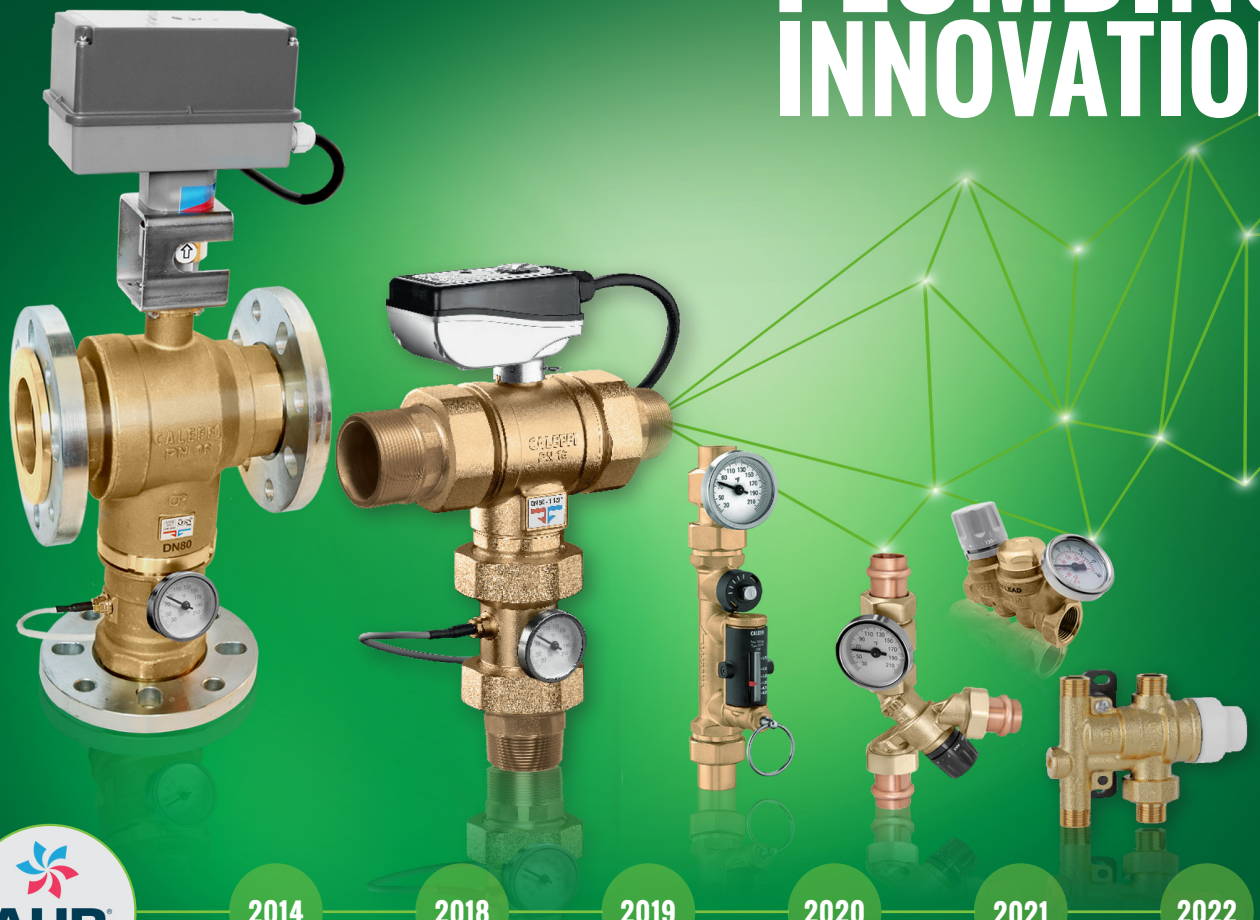

AHR EXPO

2014 2018 2019 2020 2021 2022

We are honored to be recognized by the AHR Innovation Awards panelists over the years. Caleffi's success is based on listening to the marketplace combined with a total commitment to quality. The result? Product design, performance and support that exceeds our customers' expectations. **CALEFFI GUARANTEED.**

533 SERIES PRESCAL™
COMPACT PRESSURE REDUCING VALVES

HIGH VALUE ACCURATE CONTROL

The Caleffi PresCal™ 533H compact pressure reducing valve is precision engineered to deliver accurate pressure regulation at a competitive price. Low internal pressure losses produce excellent falloff performance enabling more flow capacity to fixtures. NSF 61 certification to 180°F temperature, anti-scale components and a variety of inlet connection styles add to the high value of the most recognized PRV in the world.

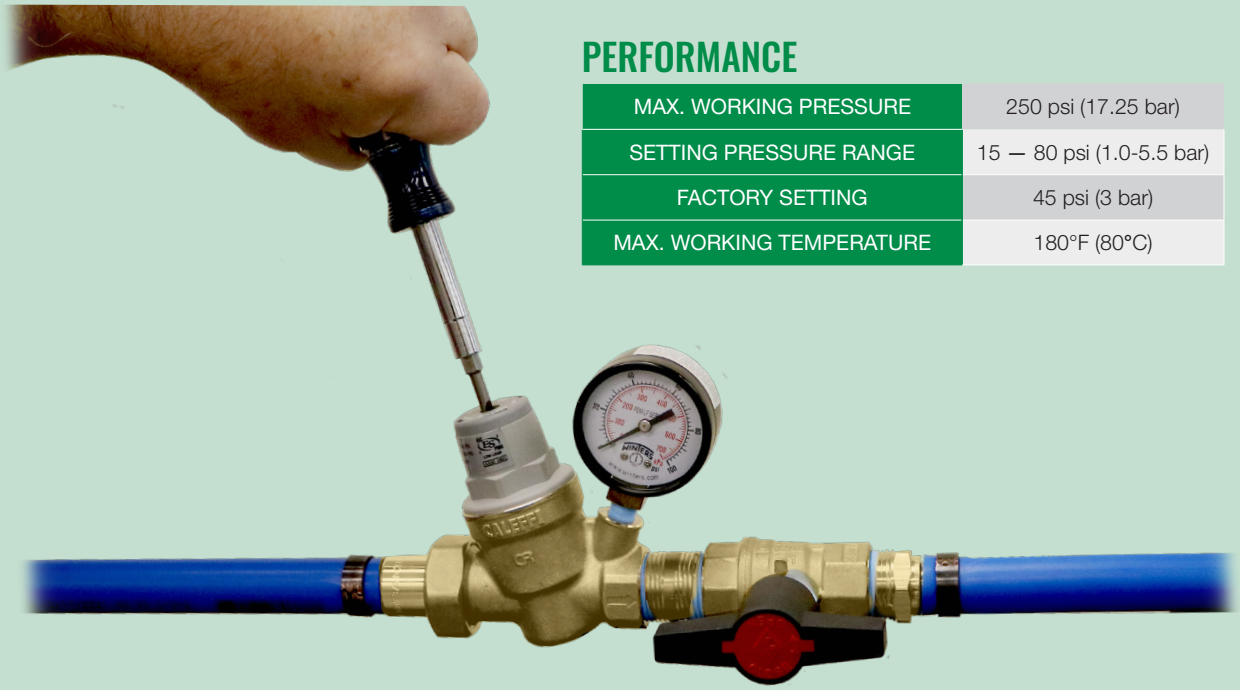

PERFORMANCE

MAX. WORKING PRESSURE	250 psi (17.25 bar)
SETTING PRESSURE RANGE	15 — 80 psi (1.0-5.5 bar)
FACTORY SETTING	45 psi (3 bar)
MAX. WORKING TEMPERATURE	180°F (80°C)

PRODUCT RANGE - PresCal™ 533H Series





ICC ES PMG LOW LEAD

ASSE 1003 NSF 61

INLET CONNECTION STYLE*	OUTLET TEMP GAUGE	CODE SIZE ½ inch	CODE SIZE ¾ inch
SWEAT		533940HA	533950HA
	√	533941HA	533951HA
NPT female		533340HA	533350HA
	√	533341HA	533351HA
PRESS		----	533650HA
	√	----	533651HA
PEX Crimp (ASTM F 1807)		----	533750HA
	√	----	533751HA
PEX Expansion (ASTM F 1960)	--	----	533850HA
	√	----	533851HA

*Oultet connection style: NPT female



Replacement cartridge, Code 533000H



NA108 Series isolation valve accessory

PRODUCT FEATURES

MOST RECOGNIZED PRV IN THE WORLD:

Millions installed in over 60 countries around the world.

PRECISION ENGINEERED:

• Low-lead DZR “Ecobrass” alloy forging resists corrosion from hard water, chlorine and oxygen.

• Low friction, high-performance moving parts for stable, accurate pressure control. Results in excellent falloff performance and quiet operation.

• Peroxide-cured EPDM elastomers for chloramine resistance and long life.

SECTION VIEW

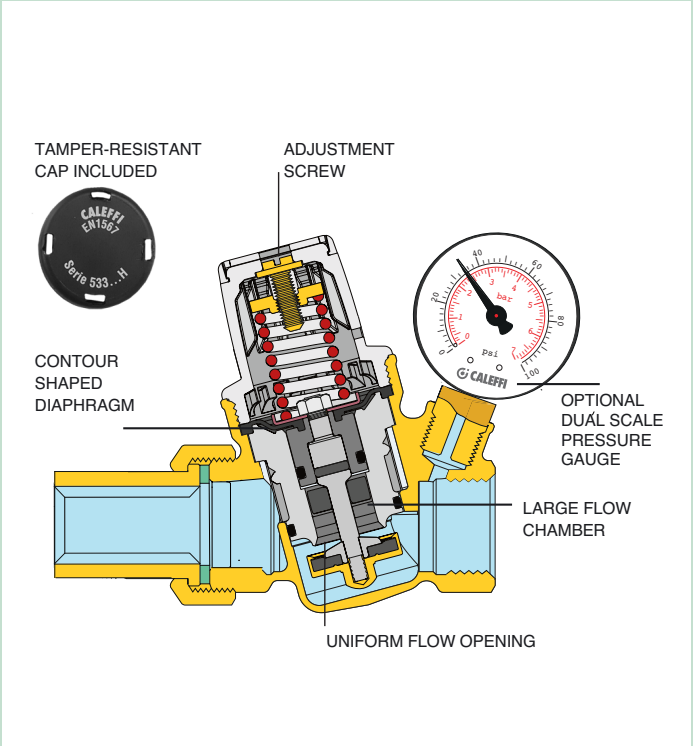

REMOVABLE SELF-CONTAINED CARTRIDGE WITH STAINLESS STEEL MESH FILTER:

Maximum debris protection and convenient in-pipe cleaning or replacing.

TAMPER-RESISTANT CAP:

Black tamper-resistant cap in included to prevent unauthorized set point adjustments.

MAINTENANCE

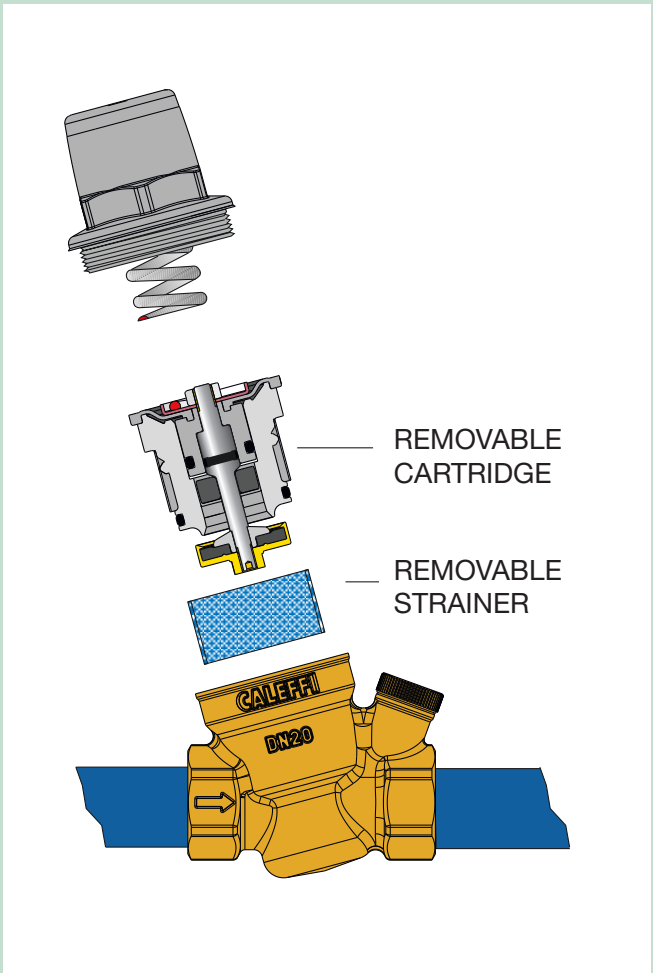

INSTALLATION FLEXIBILITY:

Variety of inlet union connnections: Sweat, NPT, Press, PEX crimp and PEX expansion.

HOT WATER BOOST SYSTEM COMPATIBLE:

Rated to 180°F. Certified to NSF 61, ASSE 1003, CSA B356 and NSF 372.

535 SERIES PRESCAL™
PRE-ADJUSTABLE PRESSURE REDUCING VALVES

HIGH FLOW AND QUIET PRESSURE CONTROL

The Caleffi PresCal™ 535H pressure reducing valve is precision engineered to deliver accurate pressure regulation under varying pressure and draw conditions. Low internal pressure losses produce superior falloff performance enabling more flow capacity to fixtures. NSF/ANSI/CAN 61 compliance, superior 180°F temperature rating, anti-scale components and convenient cartridge design add to the many features of this versatile and dependable PRV. UV protective cover included for non-freezing outdoor installations.



PERFORMANCE

MAX. WORKING PRESSURE	300 psi (20 bar)
SETTING PRESSURE RANGE	15 —90 psi (1 - 6 bar)
FACTORY SETTING	45 psi (3 bar)
MAX. WORKING TEMPERATURE	180°F (80°C)

PRODUCT RANGE - PresCal™ 535H Series







ICC ES PMG LOW LEAD

NSF/ANSI/CAN 61

SIZES	OUTLET PRESSURE GAUGE	CODE				
		FNPT	SWEAT	PRESS	PEX Crimp*	PEX Expansion**
½"		535340HA	535940HA	---	---	---
	√	535341HA	535941HA	---	---	---
¾"	--	535350HA	535950HA	535650HA	535750HA	535550HA
	√	535351HA	535951HA	535651HA	535751HA	535551HA
1"	--	535360HA	535960HA	535660HA	535760HA	535560HA
	√	535361HA	535961HA	535661HA	535761HA	535561HA
1¼"		535370HA	535970HA	535670HA	---	---
	√	535371HA	535971HA	535671HA	---	---
1½"	--	535380HA	535980HA	535680HA	---	---
	√	535381HA	535981HA	535681HA	---	---
2"	--	535390HA	535990HA	535690HA	---	---
	√	535391HA	535991HA	535691HA	---	---

* Complies with ASTM F 1807.
**Complies with ASTM F 1960.
All configurations include an UV snap-on outdoor protective cover for outdoor installation with ambient temperatures above freezing.

PRODUCT FEATURES

PRE-ADJUSTMENT KNOB:

15 to 90 psi adjustment range with convenient psi setting visible from front and back. Includes tamper-proof locking screw.

CONICAL SEAT AND SHUTTLE DESIGN:

Together with large cross-section flow chamber, minimizes pressure drop within valve. Results in superior falloff performance compared to competitors and quiet operation.

PRECISION ENGINEERING:

Tight manufacturing tolerances creates very uniform 360° flow past conical seat. Prevents wire draw erosion during low flow conditions, a common cause of upward system pressure creep during no-demand periods.

SECTION VIEW

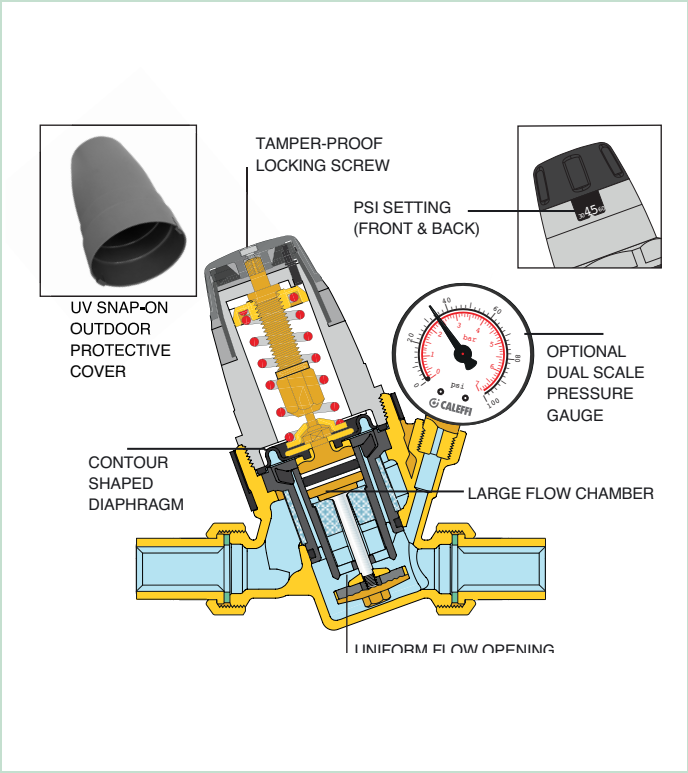

REMOVABLE SELF-CONTAINED CARTRIDGE WITH STAINLESS STEEL MESH FILTER:

Maximum debris protection and convenient in-pipe maintenance and servicing.

CONTOUR-SHAPED PEROXIDE-CURED DIAPHRAGM:

Enables accurate pressure regulation under frequent and sudden pressure fluctuations, a common cause of premature valve wear. Peroxide-cured EPDM elastomers for chlorine

APPLICATION DIAGRAM

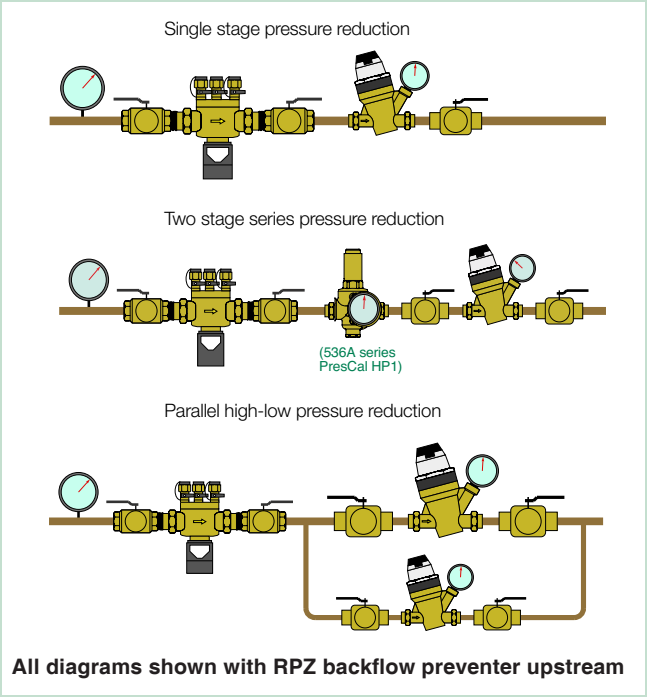

All diagrams shown with RPZ backflow preventer upstream

HOT WATER BOOST SYSTEM COMPATIBLE:

NSF/ANSI/CAN 61 rated to 180°F (commercial hot). Scale resistant internal parts to prevent flow inconsistencies. Certified to ASSE 1003, CSA B356 and NSF/ANSI 372. Plenum rated: compliant with Standard UL 2043, without cover.

536 SERIES PRESCAL™
HEAVY DUTY PISTON-TYPE PRESSURE REDUCING VALVES

PRESSURE CONTROL FOR HIGH RISE BUILDINGS AND STAGED PRESSURE APPLICATIONS

True piston operation ensures stable, high precision pressure control while withstanding potentially severe inlet pressure fluctuations and downstream water hammer. Furnished with a high quality pressure gauge and double union connections for installation flexibility. The internal cartridge is easy to remove for inline maintenance. Can be mounted outdoors in mild climates and is perfect for irrigation pressure control.

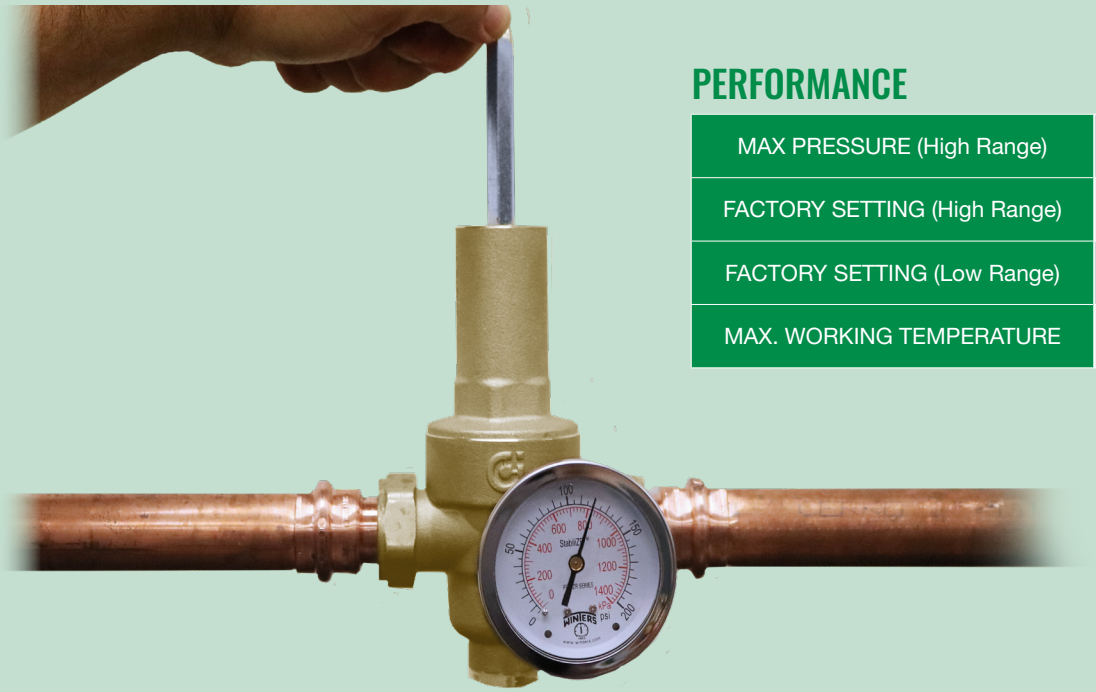

PERFORMANCE

MAX PRESSURE (High Range)	360 PSI
FACTORY SETTING (High Range)	115 psi (8 bar)
FACTORY SETTING (Low Range)	45 psi (3 bar)
MAX. WORKING TEMPERATURE	180°F (80°C)

PRODUCT RANGE - PresCal™ 536 Series

SIZES	PRESSURE RANGE	MAX. UP-STREAM PRESSURE (PSI/Bar)*	SETTING PRESSURE RANGE PSI (Bar)	CODE		
				NPT	SWEAT	PRESS
½"	High	360 / 25	90 —150 (6 —10)	**536**043A 103	**536**043A 109	---
	Low	300 / 20	10 —90 (0.7 —6)	**536**044A 103	**536**044A 109	---
¾"	High	360 / 25	90 —150 (6 —10)	**536**053A 103	**536**053A 109	**536**053A 106
	Low	300 / 20	10 —90 (0.7 —6)	**536**054A 103	**536**054A 109	**536**054A 106
1"	High	360 / 25	90 —150 (6 —10)	**536**063A 103	**536**063A 109	**536**063A 106
	Low	300 / 20	10 —90 (0.7 —6)	**536**064A 103	**536**064A 109	**536**064A 106
1¼"	High	360 / 25	90 —150 (6 —10)	**536**073A 103	**536**073A 109	**536**073A 106
	Low	300 / 20	10 —90 (0.7 —6)	**536**074A 103	**536**074A 109	**536**074A 106
1½"	High	360 / 25	90 —150 (6 —10)	**536**083A 103	**536**083A 109	**536**083A 106
	Low	300 / 20	10 —90 (0.7 —6)	**536**084A 103	**536**084A 109	**536**084A 106
2"	High	360 / 25	90 —150 (6 —10)	**536**093A 103	**536**093A 109	**536**093A 106
	Low	300 / 20	10 —90 (0.7 —6)	---	---	---



High Range
536043A 103



Low Range
536044A 109

*Press models 200 psi (13 bar) maximum.
Low range 536A models comply with ASSE 1003.

Complies with NSF/ANSI 372, Drinking Water System Components-Lead Content Reduction of Lead in Drinking Water Act, California Health and Safety Code 116875 S.3874, Reduction in Drinking Water Act, Vermont Act 193 - The Lead in Plumbing Supplies Law and Maryland's Lead Free Law HB.372, as certified by ICC-ES, file PMG-1360.

NSF/ANSI 372
NSF/ANSI/CAN 61

ICC ES PMG LOW LEAD

PRODUCT FEATURES

UNIQUE PISTON DESIGN FOR HIGH PRESSURE REDUCTION:

Heavy duty piston/cylinder design is perfect for reducing extreme high supply pressures in two-stage reduction applications.

SECTION VIEW

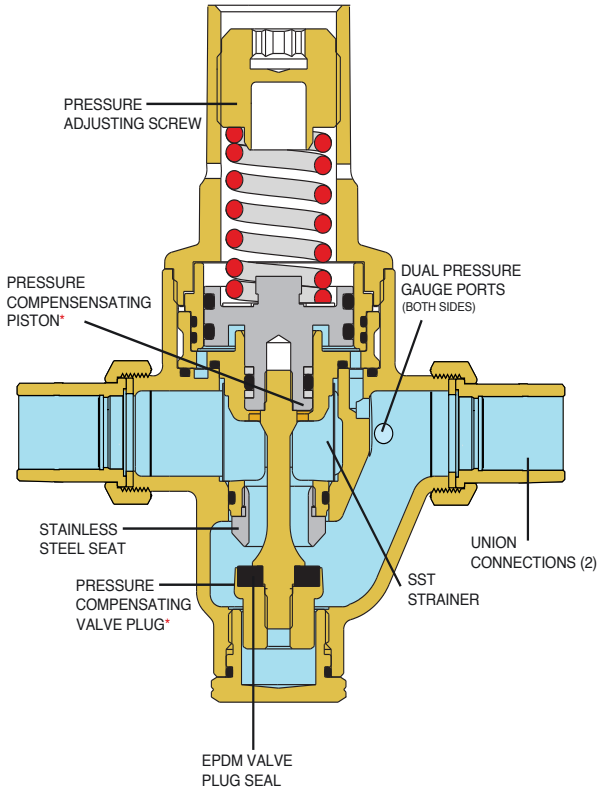

*opposing equal area surfaces for pressure balancing.

PRECISION ENGINEERING:

Heavy duty piston design withstands punishing water hammer better than diaphragm designs, for long life under severe conditions.

ALL METAL CONSTRUCTION:

Can be mounted outdoors in mild climates, perfect for irrigation applications.

REMOVABLE SELF-CONTAINED CARTRIDGE WITH STAINLESS STEEL MESH FILTER:

Maximum debris protection and convenient in-pipe maintenance and servicing.

PRESSURE COMPENSATING:

Ensures stable controlled outlet pressure despite upstream system pressure fluctuations.

FLEXIBLE AND EASY INSTALLATION:

Vertical or horizontal installation. Dual gauge ports with included high quality pressure gauge for left-to-right or right-to-left flow orientation. Double unions simplify installation and removal for cleaning/maintenance.

APPLICATION DIAGRAM

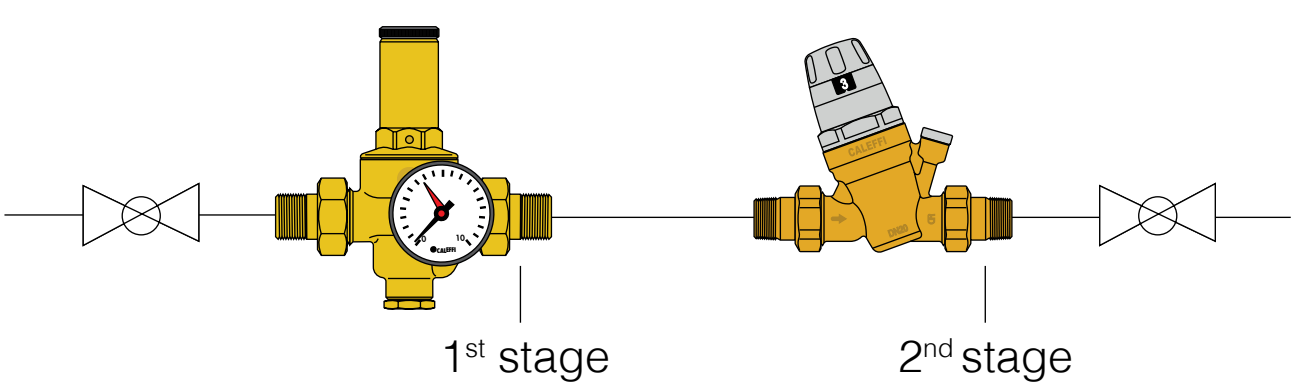

CALEFFI
Hydronic Solutions

www.caleffi.com

PRESCAL™ PRV

PRECISION ENGINEERED
FOR ACURATE PRESSURE CONTROL



The Caleffi PresCal™ family of pressure reducing valves is **precision engineered** to deliver accurate pressure regulation under varying conditions in commercial and residential applications. Experience **superior falloff performance** and ease of maintenance within the wide range of pressure control options. **CALEFFI GUARANTEED.**