Automatic air vent and shut-off valve for solar systems

250 series





Function

Automatic air vents are used in the closed circuits of solar heating systems. They allow air contained in the fluid to be released automatically during the filling process, through a valve operated by a float in contact with fluid in the system.
The shut-off valves are used in combination with the automatic air vents to isolate them after filling the circuit of solar heating systems.

These series of products have been specially made to work at high temperatures with a glycol medium.

Product range

Code 250041A Automatic air vent for solar systems ..... size 1/2" M NPT
Code NA29284 Shut-off valve for automatic air vent ..... size 1/2" M NPT x 1/2" F NPT

Technical specifications of 250 series valve

Materials: - body:	brass chrome plated
- cover:	brass chrome plated
- control spindle:	stainless steel
- float:	high resistance polymer
- seals:	EPDM
Medium:	water, glycol solutions
Max. percentage of glycol:	50%
Working temperature range:	-20 to 360°F (-30 to 180°C)
Max. working pressure:	150 psi (10 bar)
Max. discharge pressure:	75 psi (5 bar)
Connection:	1/2" M NPT

Technical specifications of valve NA29284

Materials: - body:	brass chrome plated
- ball:	brass chrome plated
- seals:	P.T.F.E.
Medium:	water, glycol solutions
Max. percentage of glycol:	50%
Working temperature range:	-20 to 360°F (-30 to 180°C)
Max. working pressure:	150 psi (10 bar)
Connection:	1/2" F x 1/2" M NPT

Dimensions

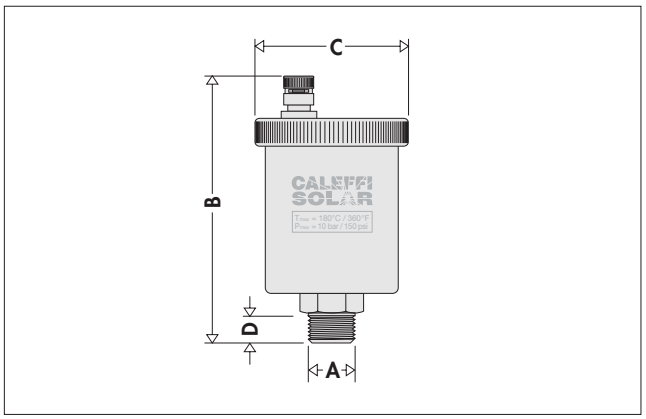

Code	A	B	C	D	Weight (lb)
250041A	1/2"	4"	Ø2 1/8"	1/2"	0.7

Dimensions

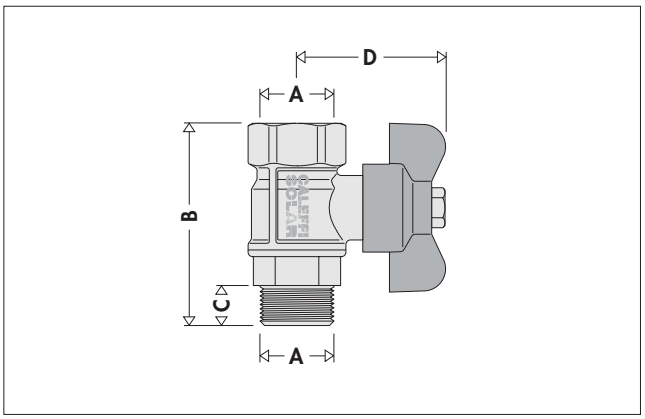

Code	A	B	C	D	Weight (lb)
NA29284	1/2"	2 7/8"	1/2"	1 1/2"	0.5

Operating principle

The accumulation of air bubbles in the valve body causes the float to drop so the air vent valve opens.

This phenomenon occurs, and consequently, the valve functions correctly, as long as the water pressure remains below the maximum discharge pressure.

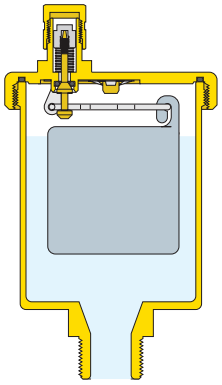

Maintenance

The 250 series automatic air vent is made to allow checking of the internal mechanism.
Access to the moving parts that govern the air vent is attained by simply removing the top cover.
A shut-off valve must be installed before the 250 series device to allow shut off to simplify any maintenance work and for shutting off after the filling phase.

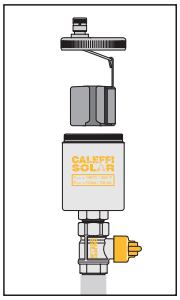

Construction details

Resistance to temperature
The high performance level of this series of automatic air vent valves, required in solar heating systems, is ensured by using materials that are highly resistant to temperature. The materials allow the vent function with glycol water temperatures up to 360°F (180°C).

Hydraulic characteristics

Discharge capacity when the system is being filled

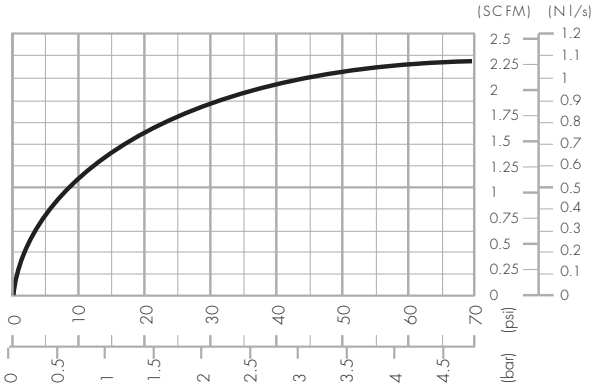

Installation

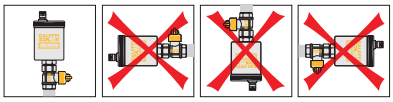

250 series automatic air vents must be installed in a vertical position, typically on the top of the solar heating system panels and at points in the circuit where air bubbles gather that need to be discharged.
They must always be installed in combination with a shut-off valve. This is necessary since the vent valves must be shut off after use to remove the air during the filling and starting up phase of the system.

Application diagram

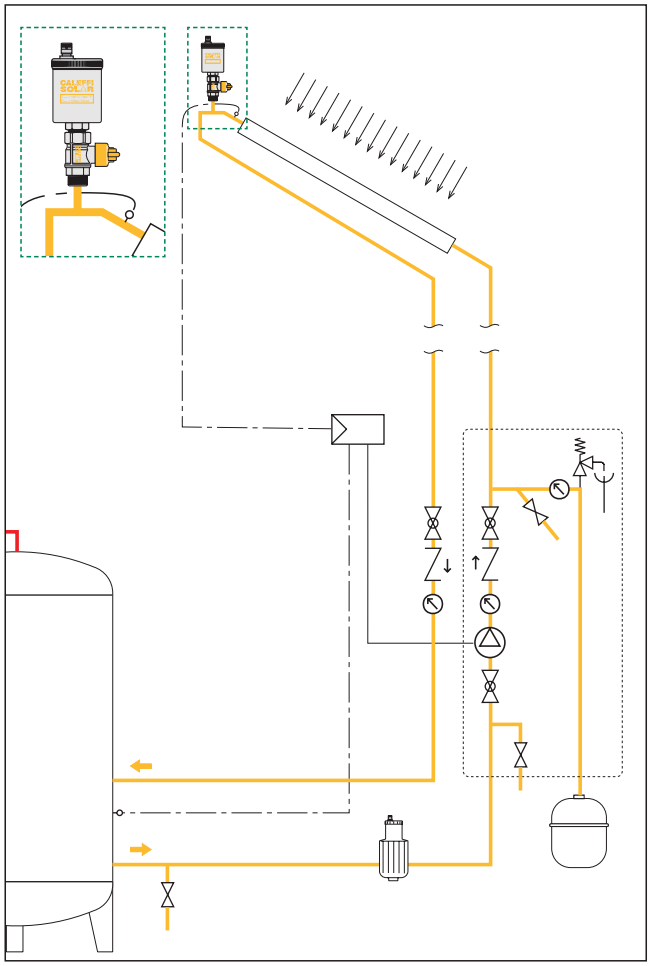

SPECIFICATION SUMMARIES

250 series
Automatic air vent for solar heating systems. 1/2” Male NPT connections. Brass body and cover. Chrome plated. Float in high resistance polymer. Seals in high resistance elastomer. Medium: water and glycol solutions. Maximum percentage of glycol: 50%. Working temperature range: -20 to 360°F. Maximum working pressure: 150 psi. Maximum discharge pressure: 75 psi.

Code NA29284
Shut-off valve for automatic air vent for solar heating systems. 1/2” F NPT x 1/2” M NPT connections. Chrome plated brass body and ball. Seals in high resistance elastomer. Medium: water and glycol solutions. Maximum percentage of glycol: 50%. Working temperature range: -20 to 360°F. Maximum working pressure: 150 psi.