Florestone
Mop Receptors

QUALITY YOU CAN TRUST.

Since 1947, Florestone Products Company has built a reputation based on product quality, ease of installation and reliability. Today we serve contractors, engineers, specifiers, architects and builders with products, service and distribution nationwide. The manufacturing methods, craftsmanship and attention to detail of Florestone Mop Receptors are second to none.

WIDE VARIETY OF SIZES AND STYLES.

You have a wide choice of models, sizes, and styles. Many models are available in recess, corner, and neo-angle styles, with a choice of flanges and caps. You can choose between the durability of heavy-weight terrazzo and practicality of light-weight pressure molded construction.

ONE PIECE CONSTRUCTION

Molded under pressures up to 100,000 pounds per square foot, Florestone Molded Mop Receptors are designed not to crack or leak under normal use. Terrazzo receptors are also one-piece design with galvanized steel flanges cast integral for durability.

EXCLUSIVE WEDGE-LOKÆ INTEGRAL SEAL (MOLDED MOP RECEPTORS ONLY)

Florestone Molded Mop Receptors come with an integral drain molded into the receptor, eliminating the need for a separate drain. The Wedge-Lok Seal connects easily to a 2" or 3" drain.

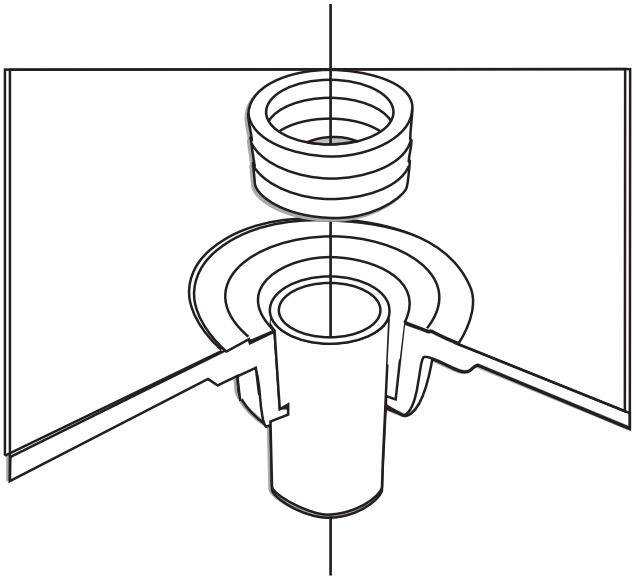

FLORESTONE
A Spec Above.™

FLORESTONE PRODUCTS CO., INC.
2851 Falcon Drive • Madera, CA 93637
T. 559.661.4171 • T. 800.446.8827
F. 559.661.2070 • florestone.com

Florestone Molded and Terrazzo Mop Receptors Accessories

Architect's Specifications

(1) MR-370 ⅝" Hose, 5' long with clamp.

(2) MR-371 Moen Faucet with vacuum braker, double stops and bucket hook with brace. U.S. made.

(3) MR-372 Mop hanger with 3 clamps.

(4) MR-373 Stainless Steel rim guard, #304, 20 gauge, 24" or 36".
Specify length and one (1), two (2), three (3) or four (4) each.
(available on Molded Mop Sinks only)

(5) MR-374 Wedge-Lok® Seal, *specify 2" or 3".*
(available on Molded Mop Sinks only)

(6) MR-375 Flat strainer, chrome.
(available on Molded Mop Sinks only)

(7) MR-376 Dome strainer, chrome.
(available on Molded Mop Sinks only)

(8) MR-377 Two (2) each 24" panels *or*
Two (2) each 32" panels *or*
One (1) 24" panel and
One (1) 36" panel.

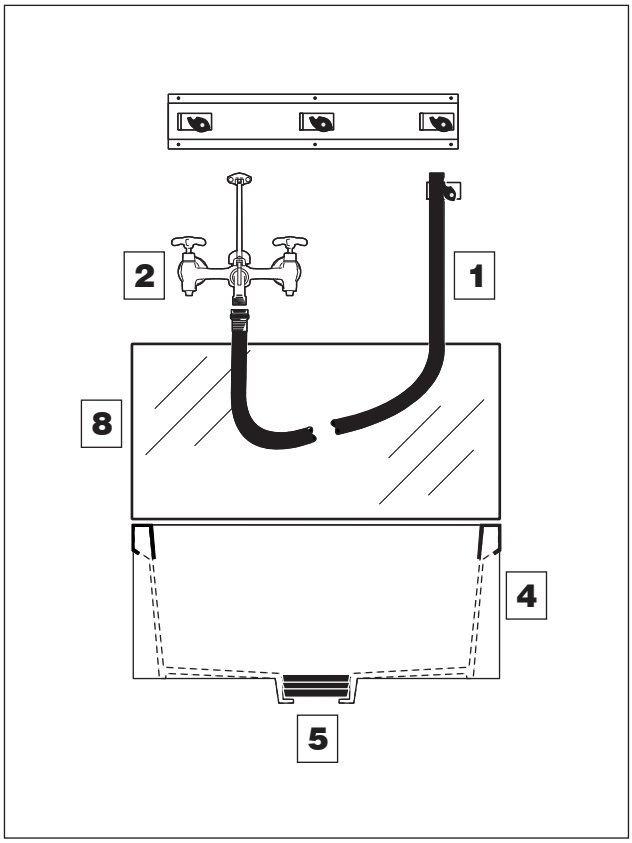

FLORESTONE
A Spec Above.™

FLORESTONE PRODUCTS CO., INC.
2851 Falcon Drive • Madera, CA 93637
T. 559.661.4171 • T. 800.446.8827
F. 559.661.2070 • florestone.com

Florestone
Molded Mop Receptors
Installation Instructions

1. Integral drain requires minimum 6" diameter x 1½" deep recess in subfloor.

2. Level and plumb mop sink in subfloor. Shim or use mortar if needed to compensate for out-of-level subfloor.

3. Install Wedge-Lok® Seal according to instructions.

4. Use water to check for proper drainage upon attaching drain pipe and prior to finishing walls.

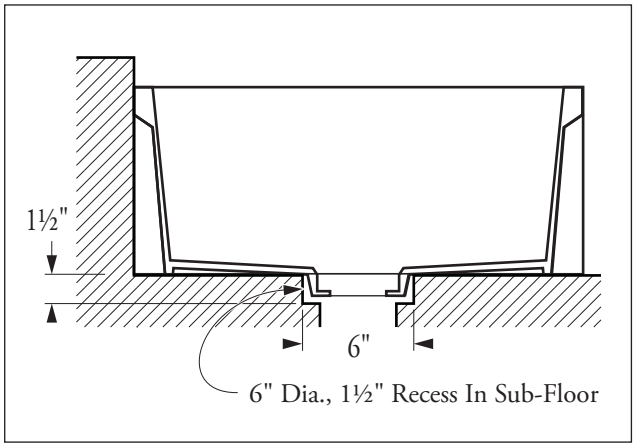

Drain Connection:

Easy to install Wedge-Lok® Seal fits most 2" or 3" ABS pipe installations. Ribbed underbody adds strength.

Allow for drain body to recess below floor level: 6" diameter by 1½" deep recess in subfloor.

FLORESTONE
A Spec Above.™

FLORESTONE PRODUCTS CO., INC.
2851 Falcon Drive • Madera, CA 93637
T. 559.661.4171 • T. 800.446.8827
F. 559.661.2070 • florestone.com