GERBER®

# INSTRUCTIONS FOR MOUNTING

## NO. 12-765 LAVATORY★

1. MARK CENTER LINES FOR LOCATION OF LAVATORY IN SLAB OR COUNTER TOP.
2. CUT OUT TEMPLATE AND WITH CENTER LINE ARROWS AS A GUIDE, TRACE LINE ON COUNTER TOP.
3. CUT OPENING IN COUNTER TOP CAREFULLY, FOLLOWING PENCIL LINE YOU TRACED.
4. MOUNT LAVATORY TO UNDERSIDE OF COUNTER TOP, LOCATING AS PER DIMENSIONAL DRAWING ON RIGHT. GERBER ANCHOR KIT #99-190 IS AVAILABLE TO SUPPORT THIS MOUNTING.
5. DIMENSIONAL DRAWING ON RIGHT INDICATES THE SUGGESTED DRILLING FOR WIDESPREAD COMBINATION LAVATORY FAUCETS RELATIVE TO THE CUT-OUT. CHECK DIMENSIONS OF INTENDED FAUCET BEFORE DRILLING.

★NOTE: DUE TO SLIGHT DIMENSIONAL VARIATIONS WE RECOMMEND USING LAVATORY AS A TEMPLATE TO INSURE PROPER ALIGNMENT OF UNDER COUNTER INSTALLATION.

BROKEN LINE REPRESENTS LAVATORY RIM WHEN SET

CUT OUT UNDERCOUNTER ALONG SOLID LINE

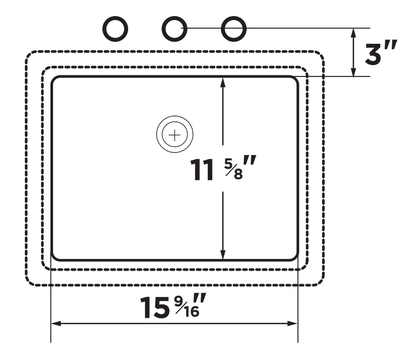


A8CGE0038-GEG1, REV.08-2018
THIS TEMPLATE IS FOR 12-765 LAVATORY

紙張尺寸：660*435 mm