Advanced Heating and Hot Water Systems

272 Duchaine Blvd. · New Bedford, MA 02745 · 508-763-8071· Fax: 508-763-3769

STAINLESS STEEL VENT TERMINATION KIT INSTALLATION INSTRUCTIONS

(Part #V500, V1000, V2000, V3000)

NOTE: Read this entire instruction manual and refer to the Venting section of the appliance Installation and Maintenance manual before starting vent installation. Follow all instructions exactly as written.

SPECIAL ATTENTION BOXES

The following defined terms are used throughout this manual to bring attention to the presence of hazards of various risk levels, or to important product information.

⚠ DANGER

DANGER indicates an imminently hazardous situation which, if not avoided, will result in death or serious injury.

⚠ WARNING

WARNING indicates a potentially hazardous situation which, if not avoided, could result in death or serious injury.

INTRODUCTION

⚠ DANGER

This installation shall be done by a qualified service agency in accordance with these instructions, all applicable codes, and requirements of the authority having jurisdiction. If the information in these instructions is not followed exactly, property damage, personal injury, or death may result.

SAFETY CONSIDERATIONS

- Prior to installation, examine all components for possible shipping damage.
- Proper joint assembly is essential for safe venting installation. Check the integrity of all venting joints upon completing assembly. Ensure there are no leaks within the venting system.

When working on heating equipment, observe all precautions in the literature, on tags, and on labels attached to the appliance. **Follow all safety codes. Wear safety glasses and work gloves. Have a fire extinguisher available.**

⚠ DANGER

This vent termination kit may be used in sidewall termination applications ONLY. Failure to follow this warning will result in property damage, serious personal injury, or death.

INSTALLATION INSTRUCTIONS

1. Locate vent termination by referring to the appliance Installation, Operation, & Maintenance Manual.

2. Separate the vent terminal backing plate from the face by removing the four (4) screws.

3. Fasten the backing plate to face of the building by using the predrilled mounting holes on the backing plate.

4. Use a core drill or hole saw to cut two holes through the building wall, sized as indicated in Table 1. Use the back plate as a template for the location of the holes.

STOCK CODE	VENT SIZE IN INCHES	HOLE DIAMETER THROUGH WALL IN INCHES
V500	2”	2 ½”
V1000	3”	3 ½”
V2000	4”	4 ½”
V3000	6”	6 ¾”

Table 1

5. Install air intake and exhaust vent pipes through the holes, making sure there is 2” of pipe protruding on the intake, and 1 ½” of exhaust pipe protruding beyond the face of the backing plate. See Figures 1 and 2.

NOTE: The termination kit can be mounted either horizontally or vertically, as shown in Figure 3.

NOTE: In vertical termination kit installations, the exhaust MUST BE INSTALLED ABOVE THE INTAKE. Installing the exhaust below the air intake could result in exhaust recirculation.

⚠ WARNING

Failure to install the exhaust above the intake in vertical termination kit installations could result in premature appliance failure, personal injury, or death. Such failures ARE NOT covered by warranty.

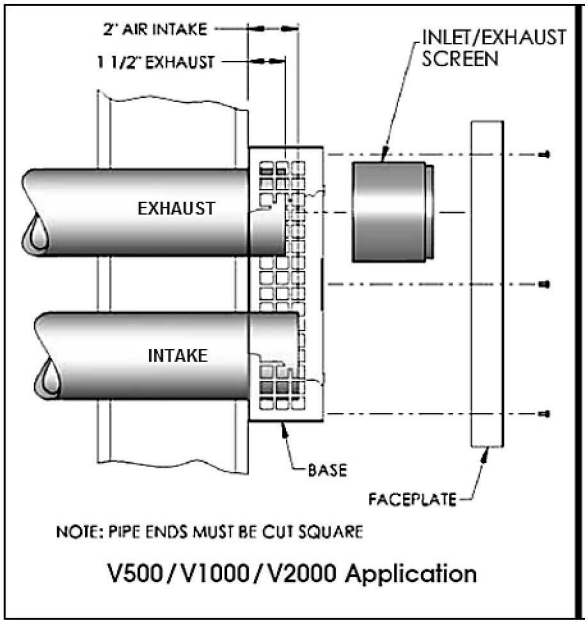

Figure 1 – 2”, 3”, and 4” application

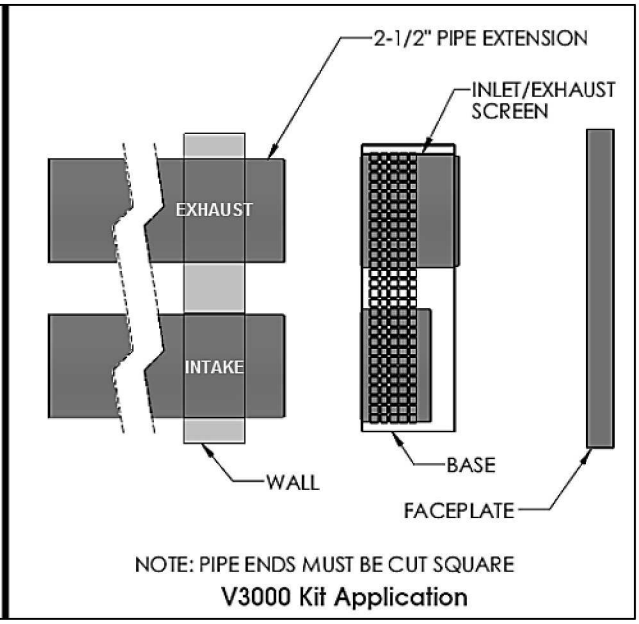

Figure 2 – 6” application

⚠ DANGER

Vent piping must be properly supported and cut perfectly square with the vent kit. Failure to do so will cause an accumulation of rain water in the vent that will prevent the unit from operating correctly and safely, and result in property damage, serious personal injury, or death.

6. Assemble face of vent terminal to vent terminal backing plate. Use the four (4) screws removed in step #2.

NOTE: It is required to install a field supplied 45° PVC or CPVC street elbow matching the vent kit exhaust diameter to the exhaust port. Install a 6” length of pipe matching the vent diameter into the elbow. Complete the installation by ensuring the pipe terminates upright. This will allow the exhaust to vent further away from the intake, and alleviate issues with appliance operation. Do not worry about rainwater collection, as this will flush through the condensate line. See Figure 3 for detail.

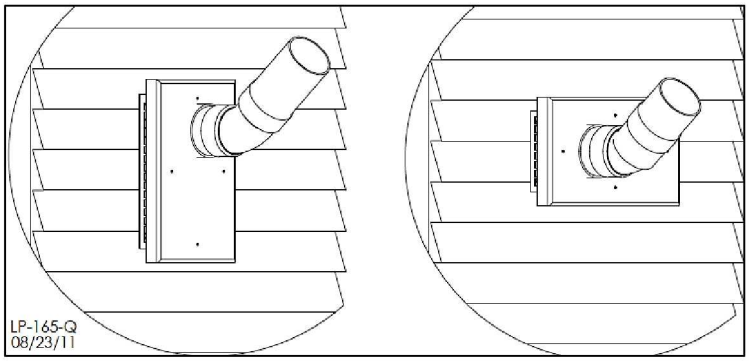

Figure 3 – Application with Street Elbow and Pipe Extension

⚠ WARNING

Failure to install a 45° elbow and 6” length of pipe could result in premature appliance failure, personal injury, or death. Such failure IS NOT covered by warranty.

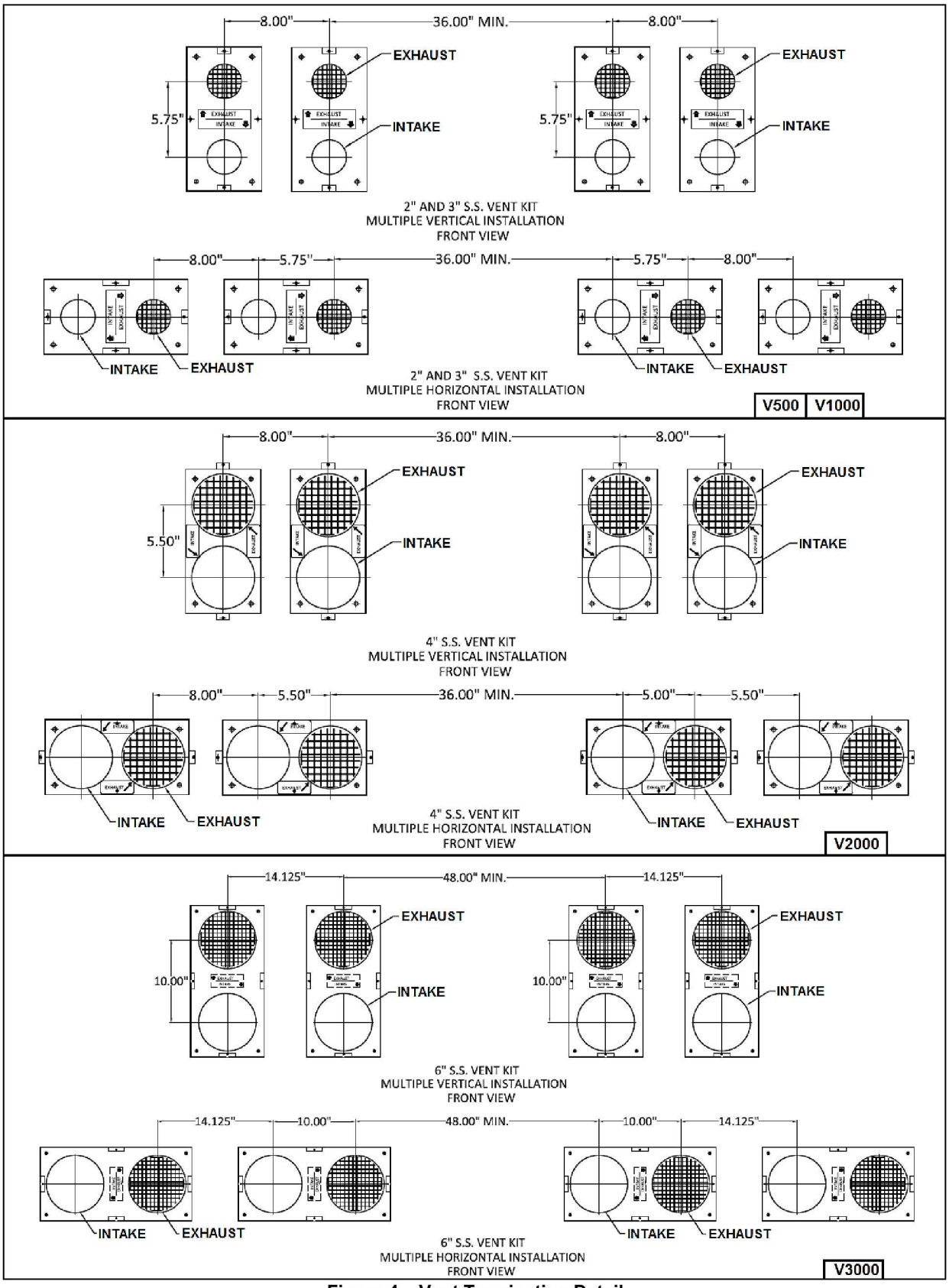

Figure 4 – Vent Termination Detail

NOTE: 45° Street Elbow and Pipe Removed from drawing for clarification of center-to-center dimensions. DO NOT operate venting system without a field supplied 45° Street Elbow and Pipe installed.